TESSERA 4x4 OFF ROAD ACCESSORIES

Think Quality!

Tessera SE

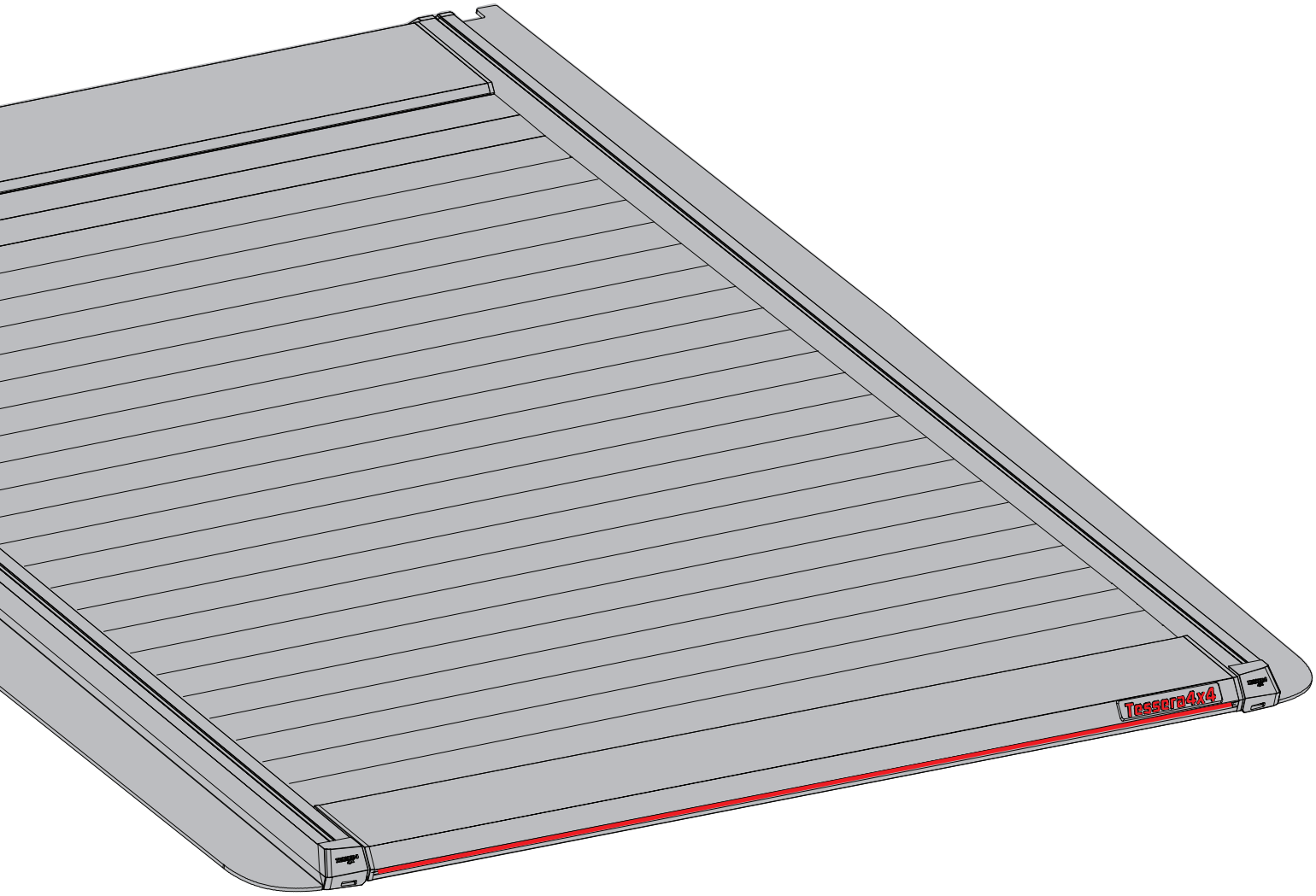

Installation Manual

PART NUMBER(S)	Model Year
TESS 15041 SE	ISUZU DMAX 2021+
TESS 15051 SE	
Cab(s)	**Installation Time / Weight**
Double Cab & Space cab	40-60 minutes / 53-57 kg

Ver.: 1.7

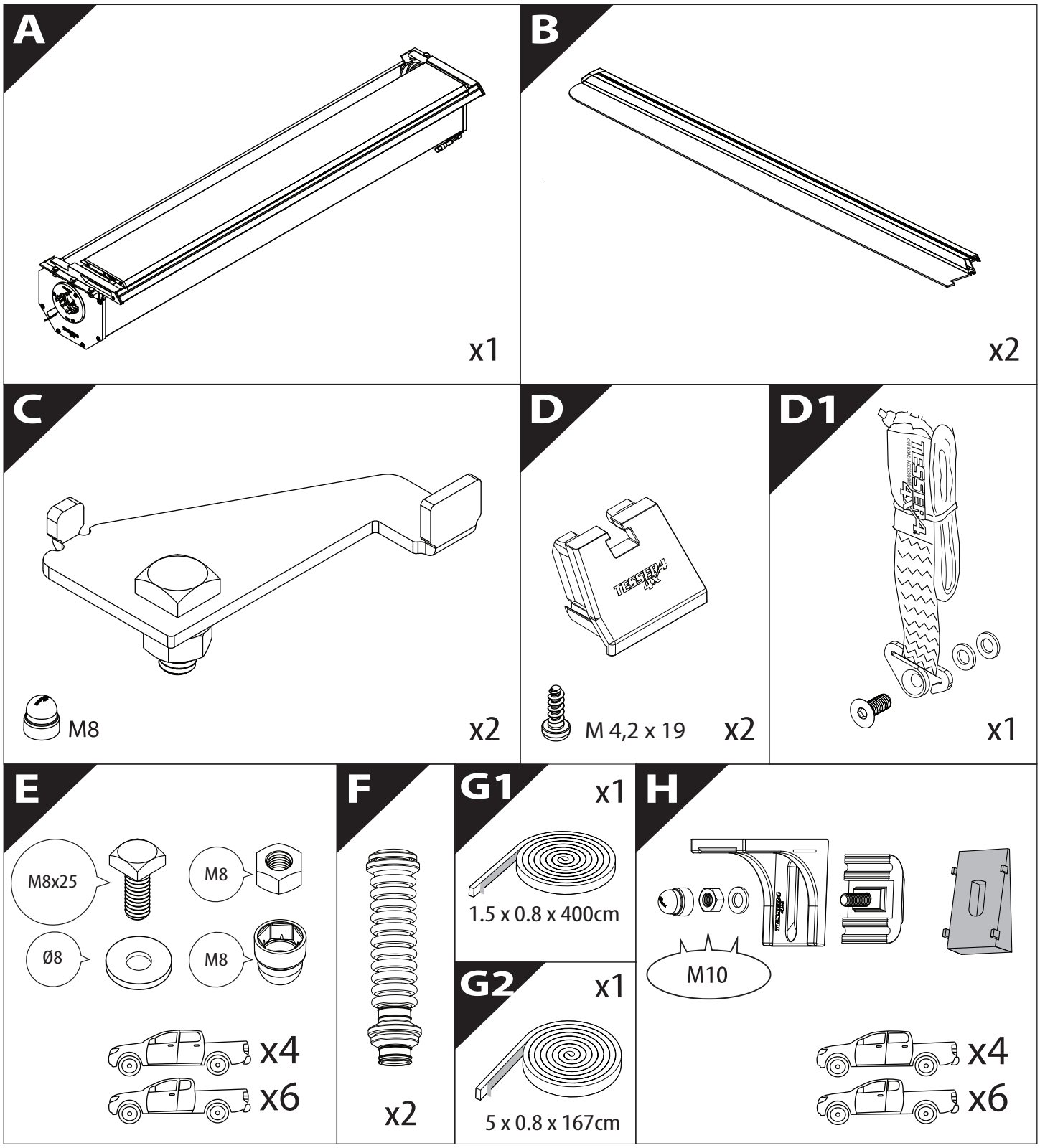
A
x1
B
x2
C
M8
x2
D
TESSERA 4X4
M 4,2 x 19
x2
D1
TESSERA 4X4
x1
E
M8x25
M8
Ø8
M8
x4
x6
F
x2
G1
x1
1.5 x 0.8 x 400cm
G2
x1
5 x 0.8 x 167cm
H
M10
x4
x6

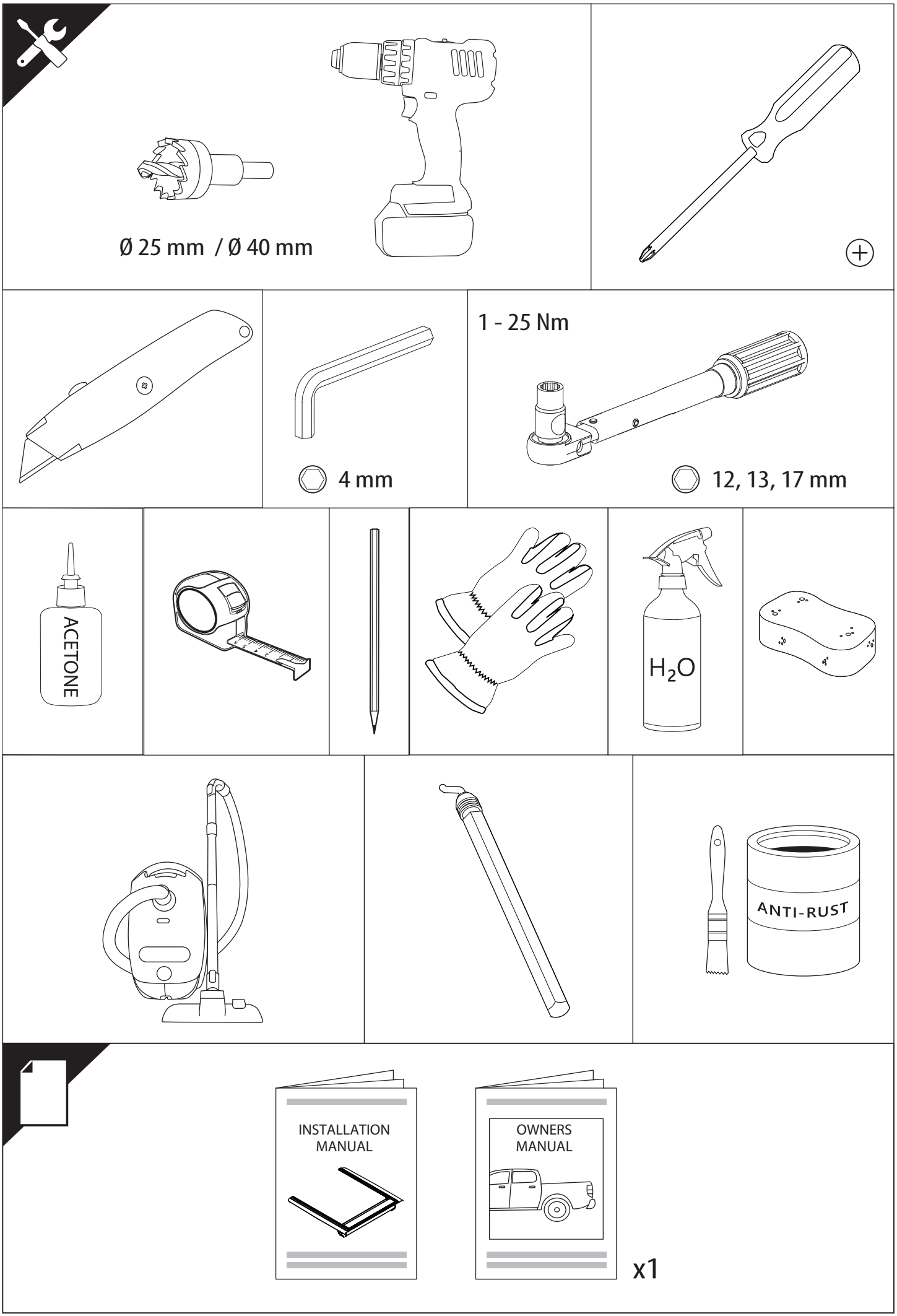
Ø 25 mm / Ø 40 mm
1 - 25 Nm
4 mm
12, 13, 17 mm
ACETONE
H_2O
ANTI-RUST
INSTALLATION MANUAL
OWNERS MANUAL
x1

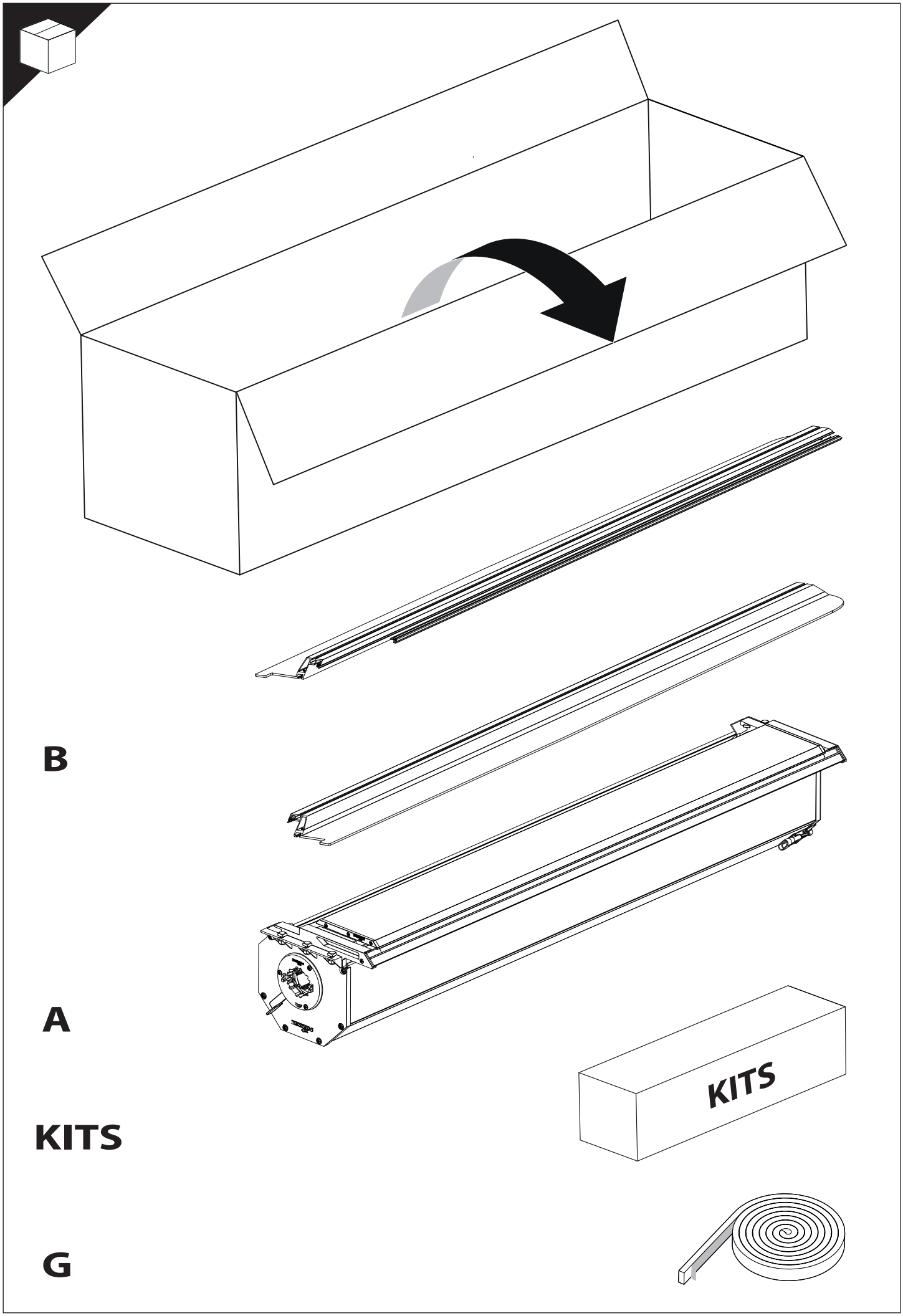
B
A
KITS
KITS
G

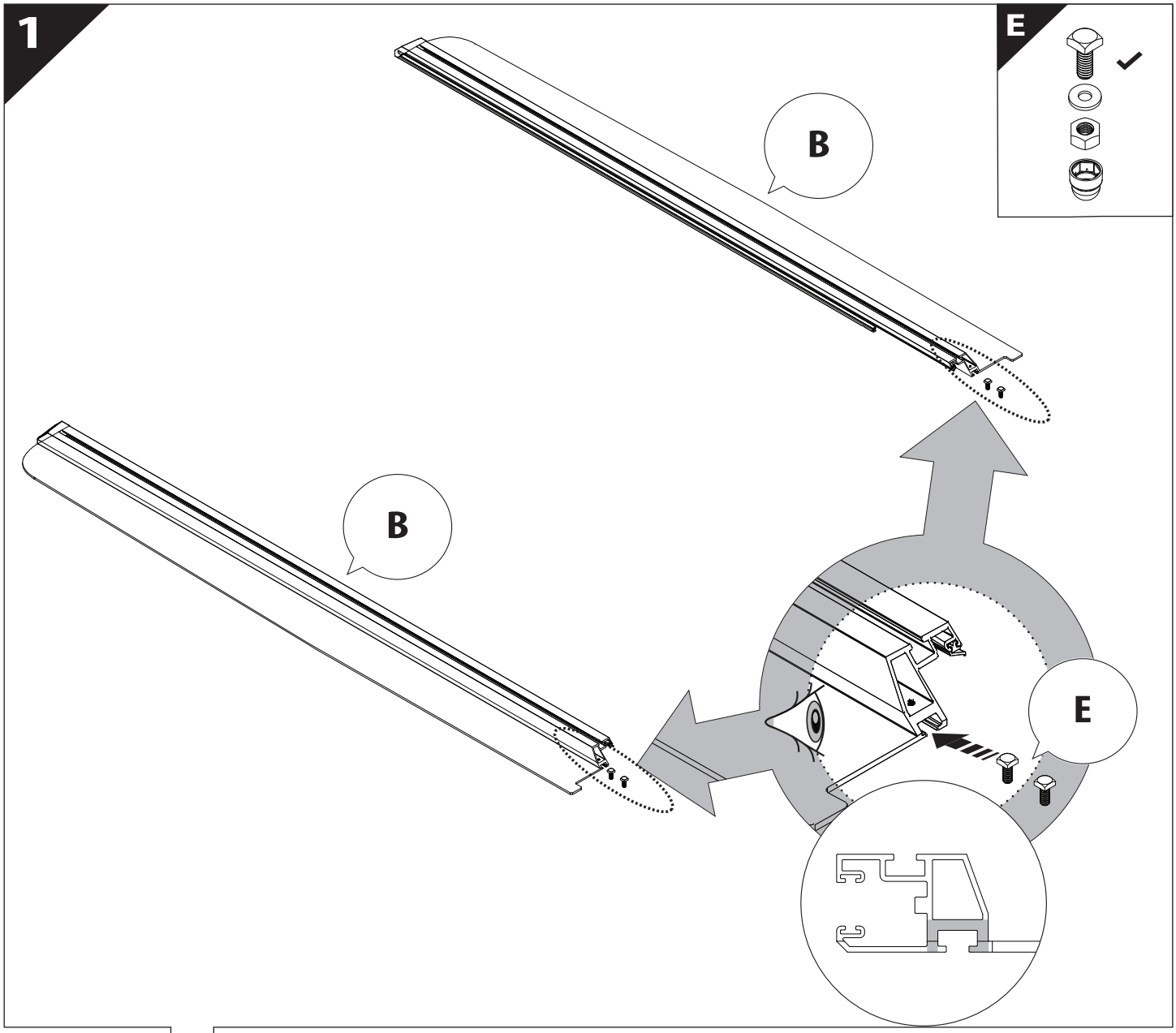
1
E
B
B
E

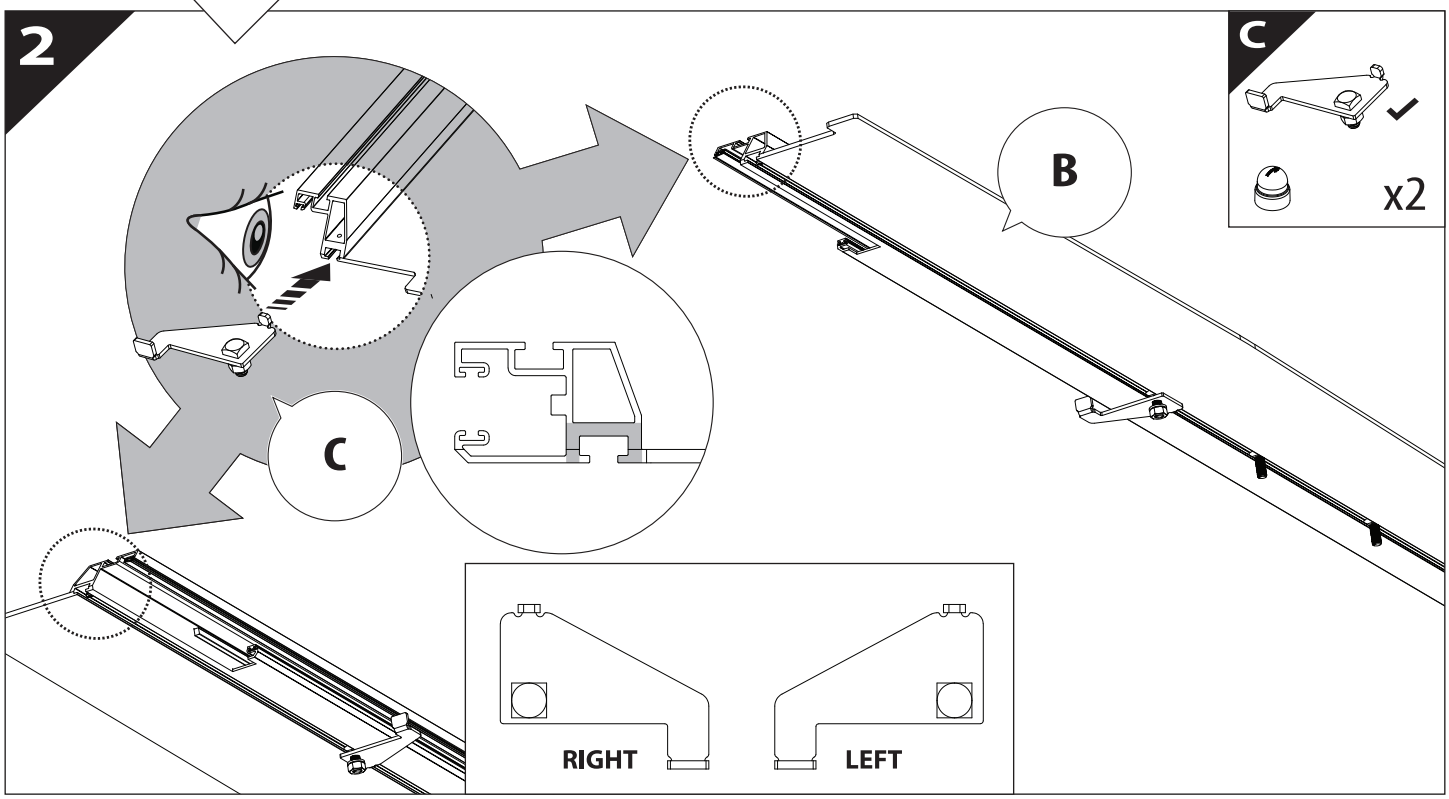
2
C
x2
B
C
RIGHT
LEFT

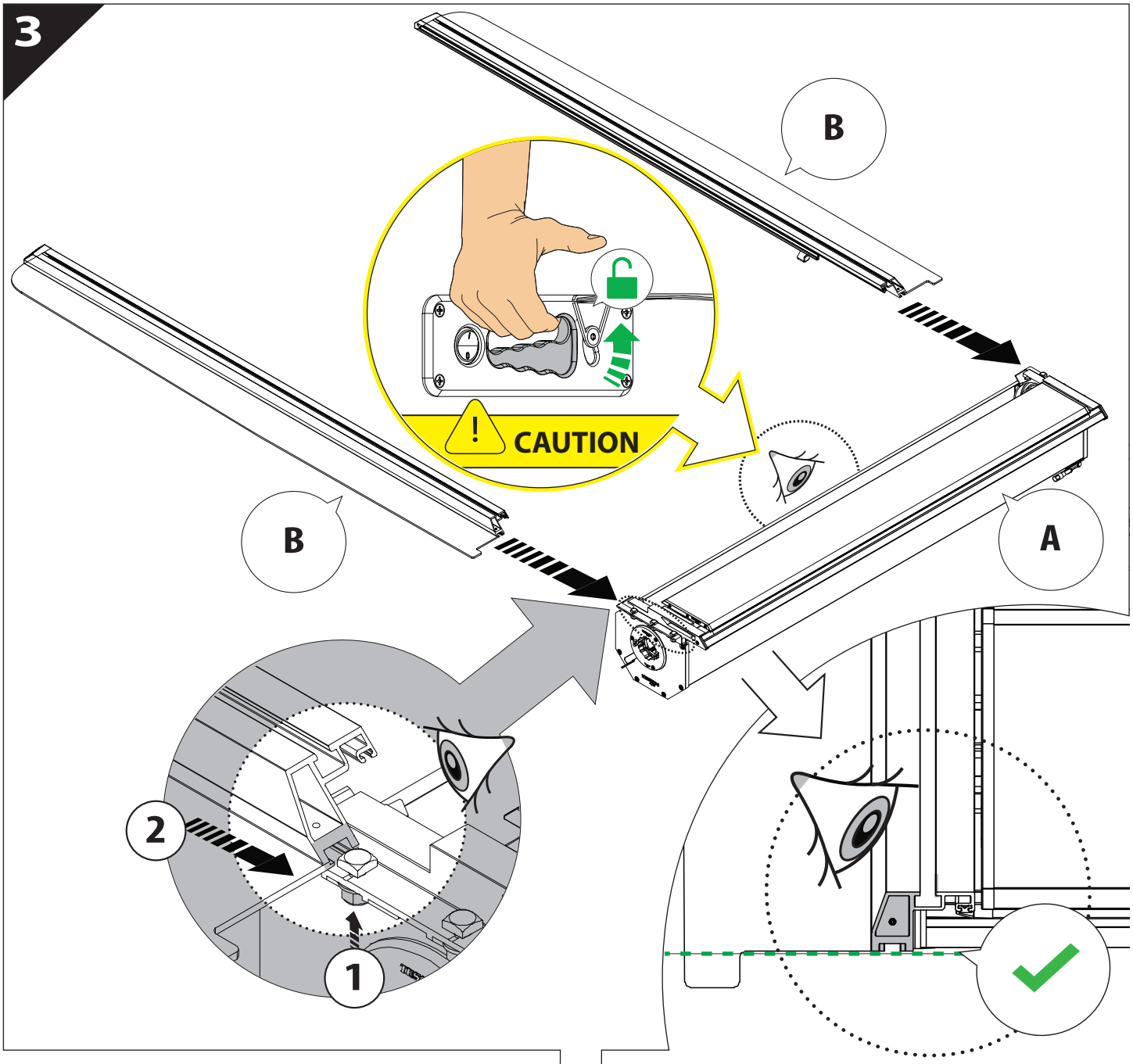
3
B
B
A
CAUTION
2
1

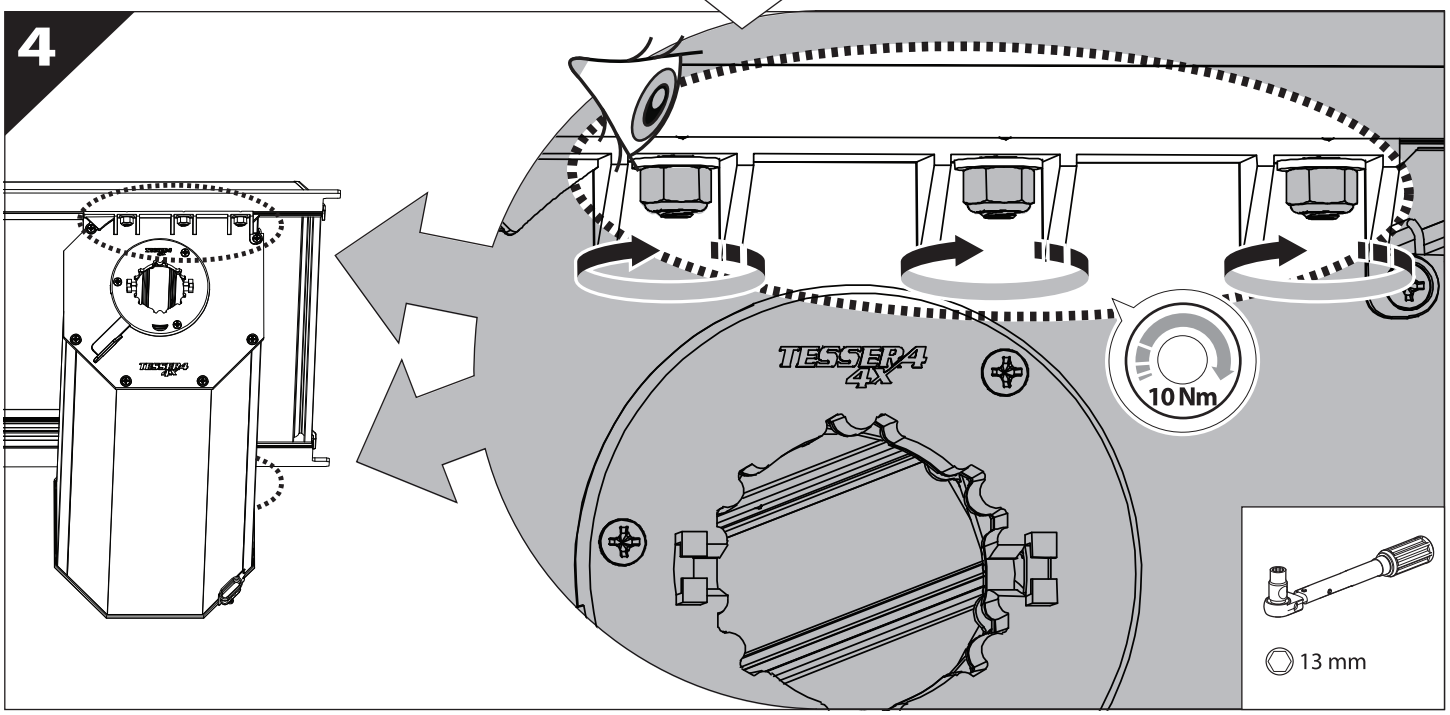
4
TESSERA 4X
10 Nm
13 mm

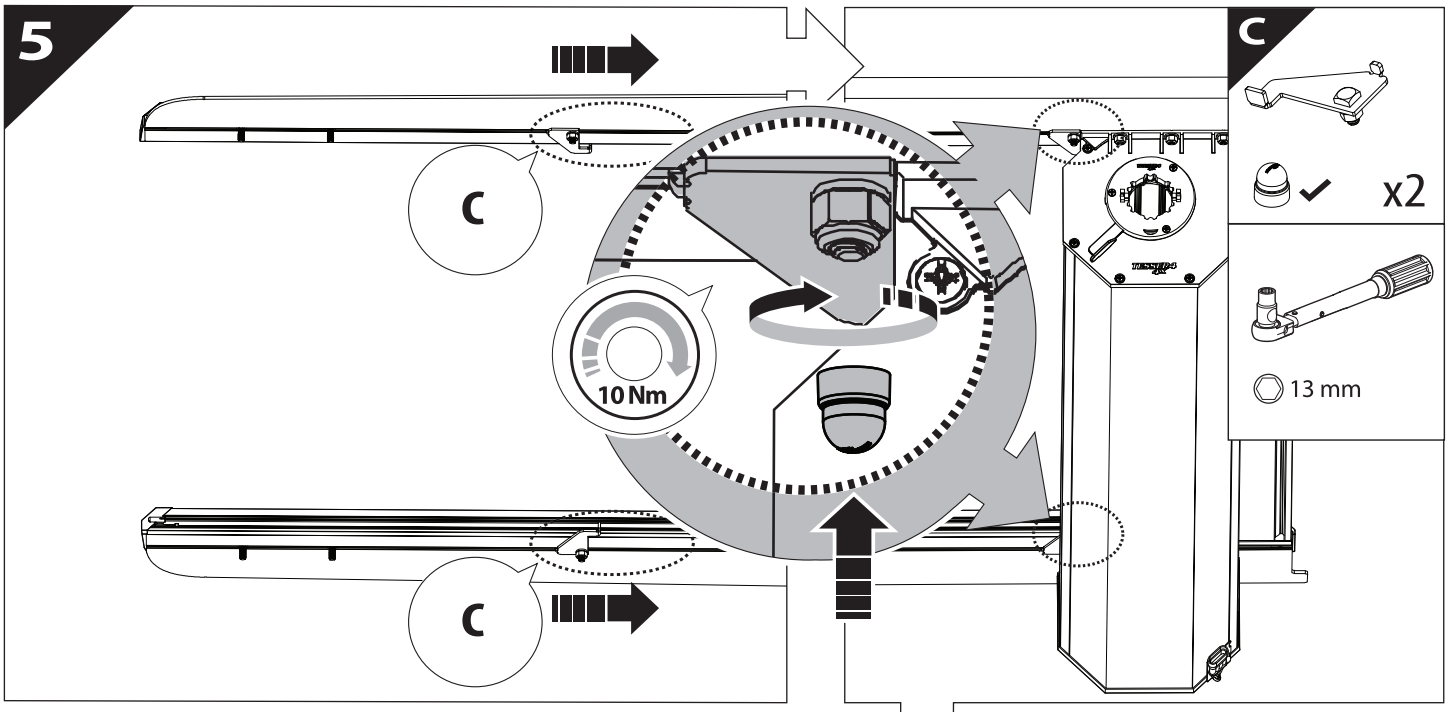
5
C
C
C
x2
10 Nm
13 mm

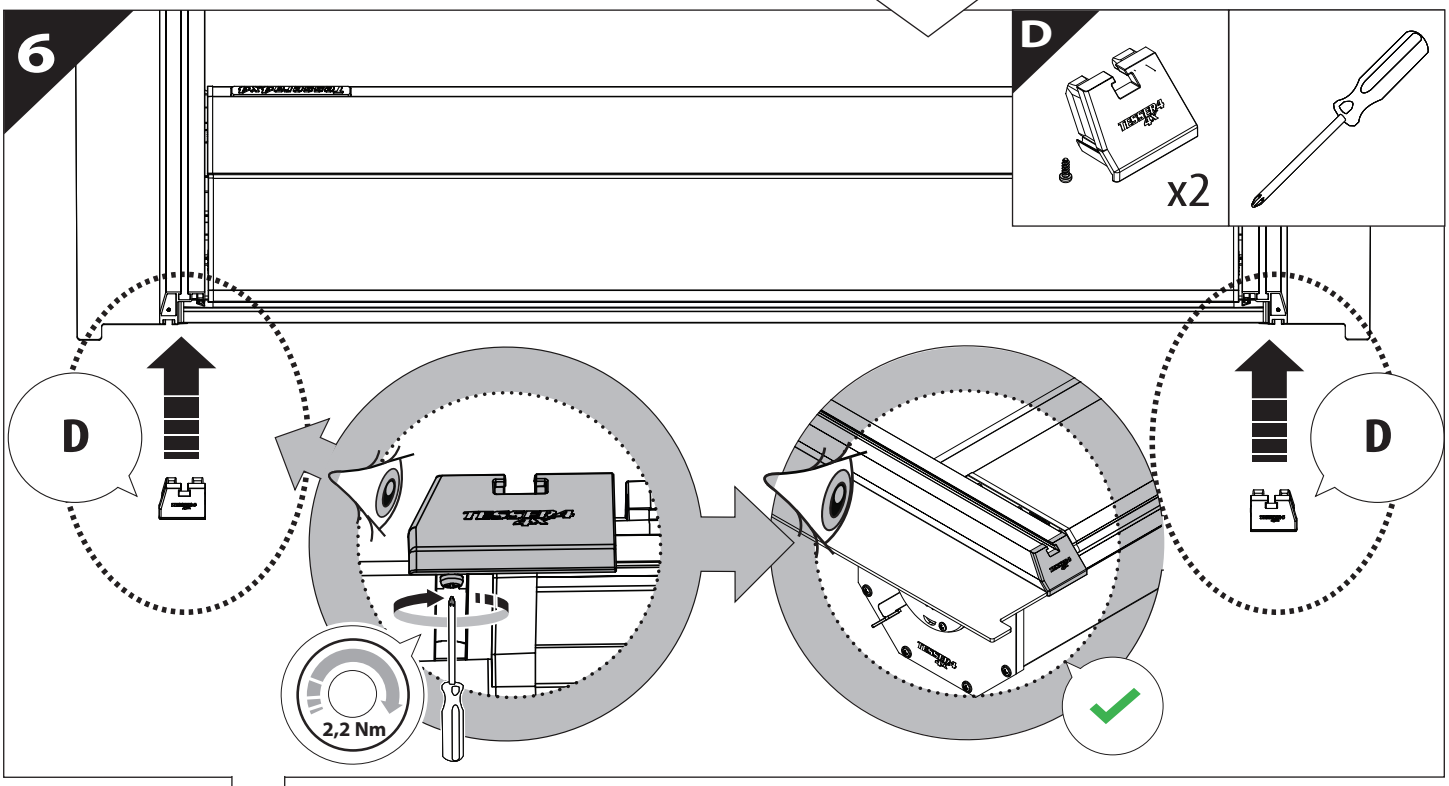
6
D
x2
D
D
2,2 Nm

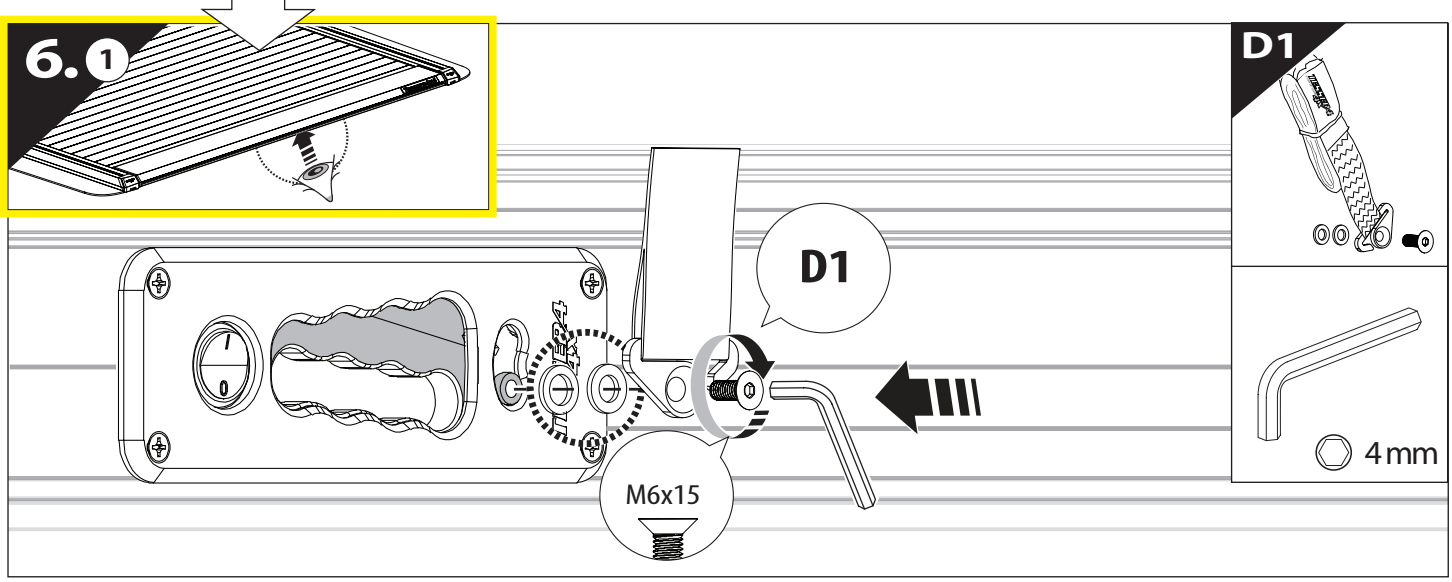
6.1
D1
D1
M6x15
4mm

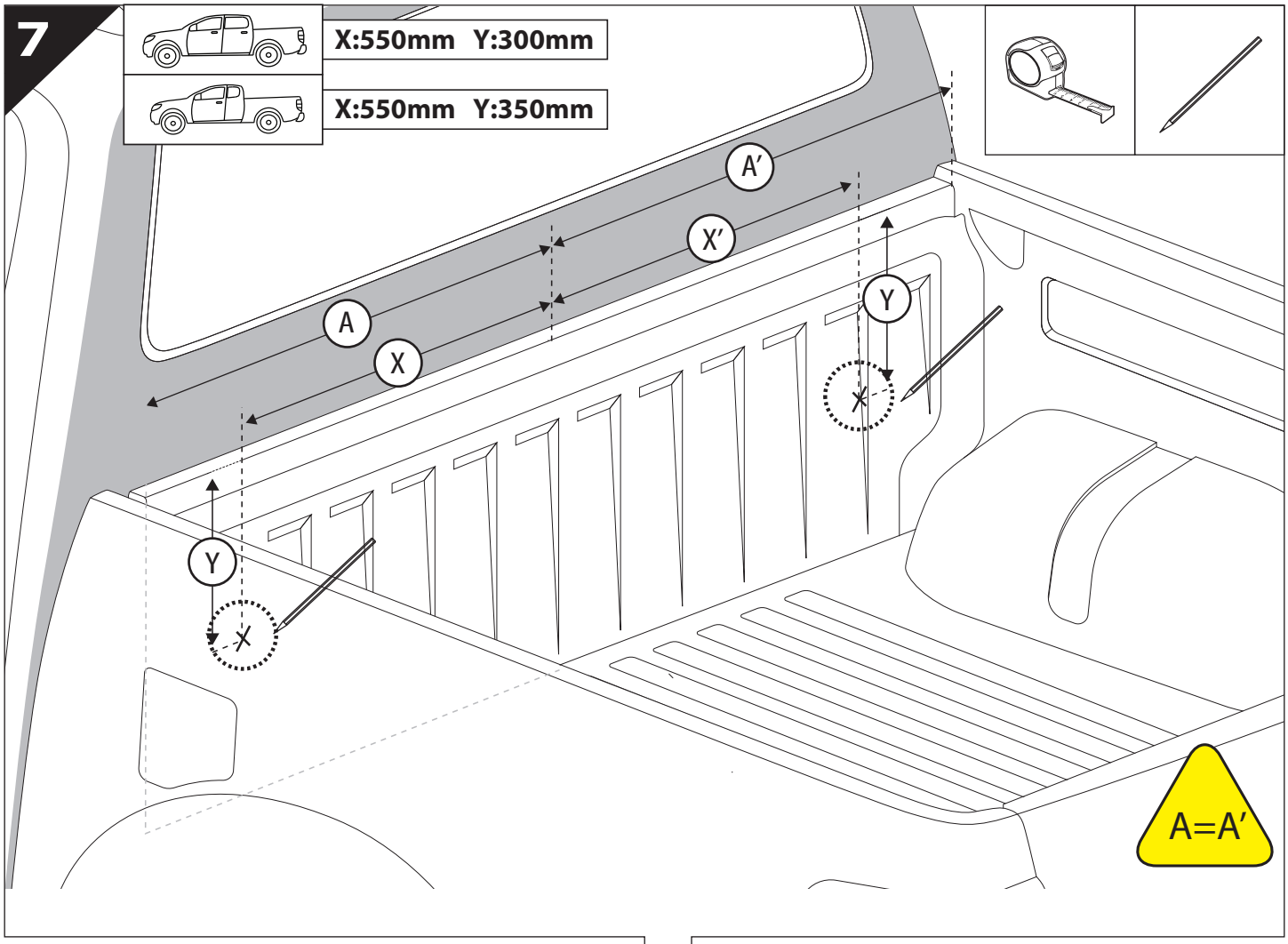
7
X:550mm Y:300mm
X:550mm Y:350mm
A'
X'
A
X
Y
Y
A=A'

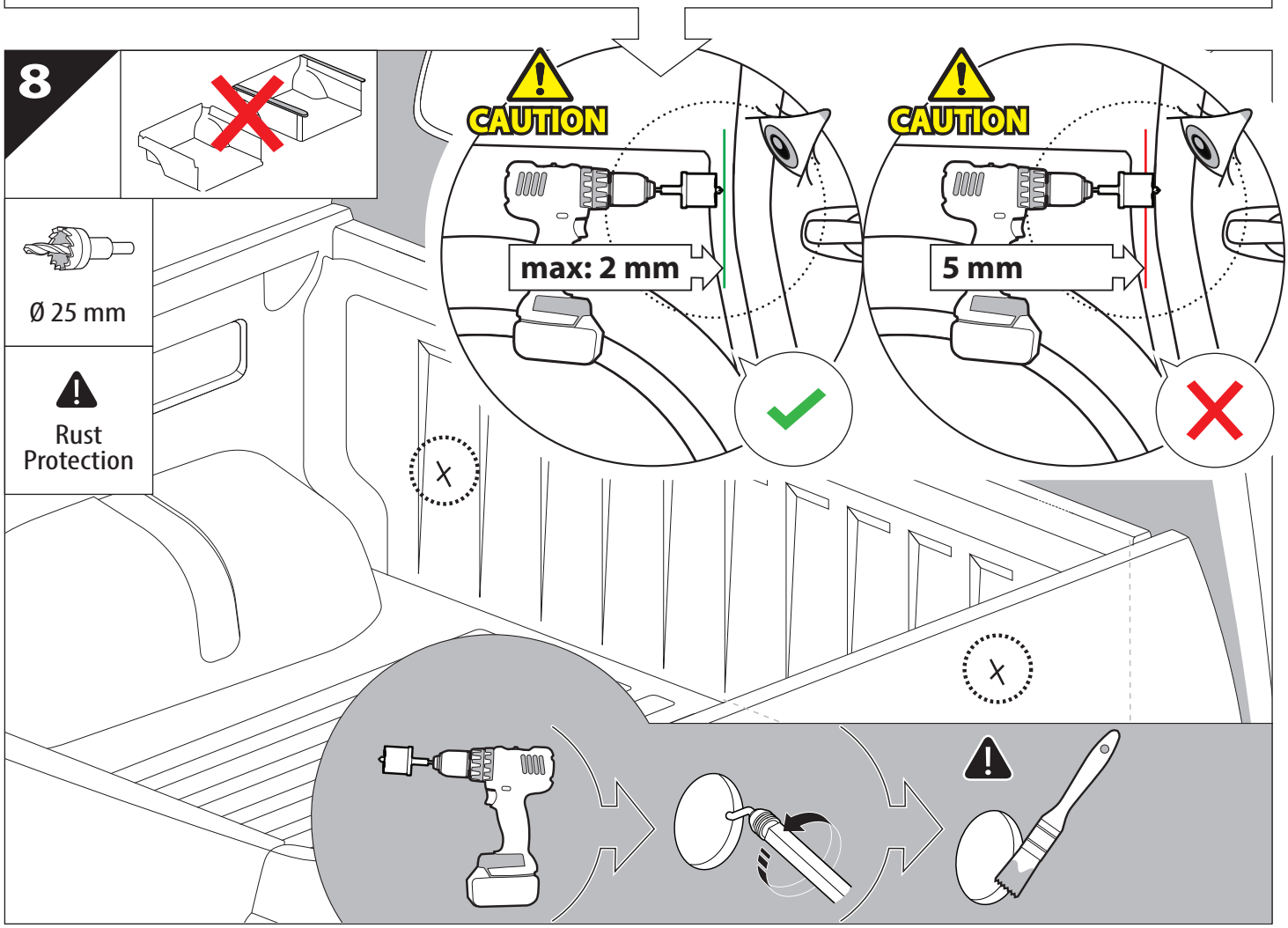
8
Ø 25 mm
Rust Protection
CAUTION
max: 2 mm
CAUTION
5 mm

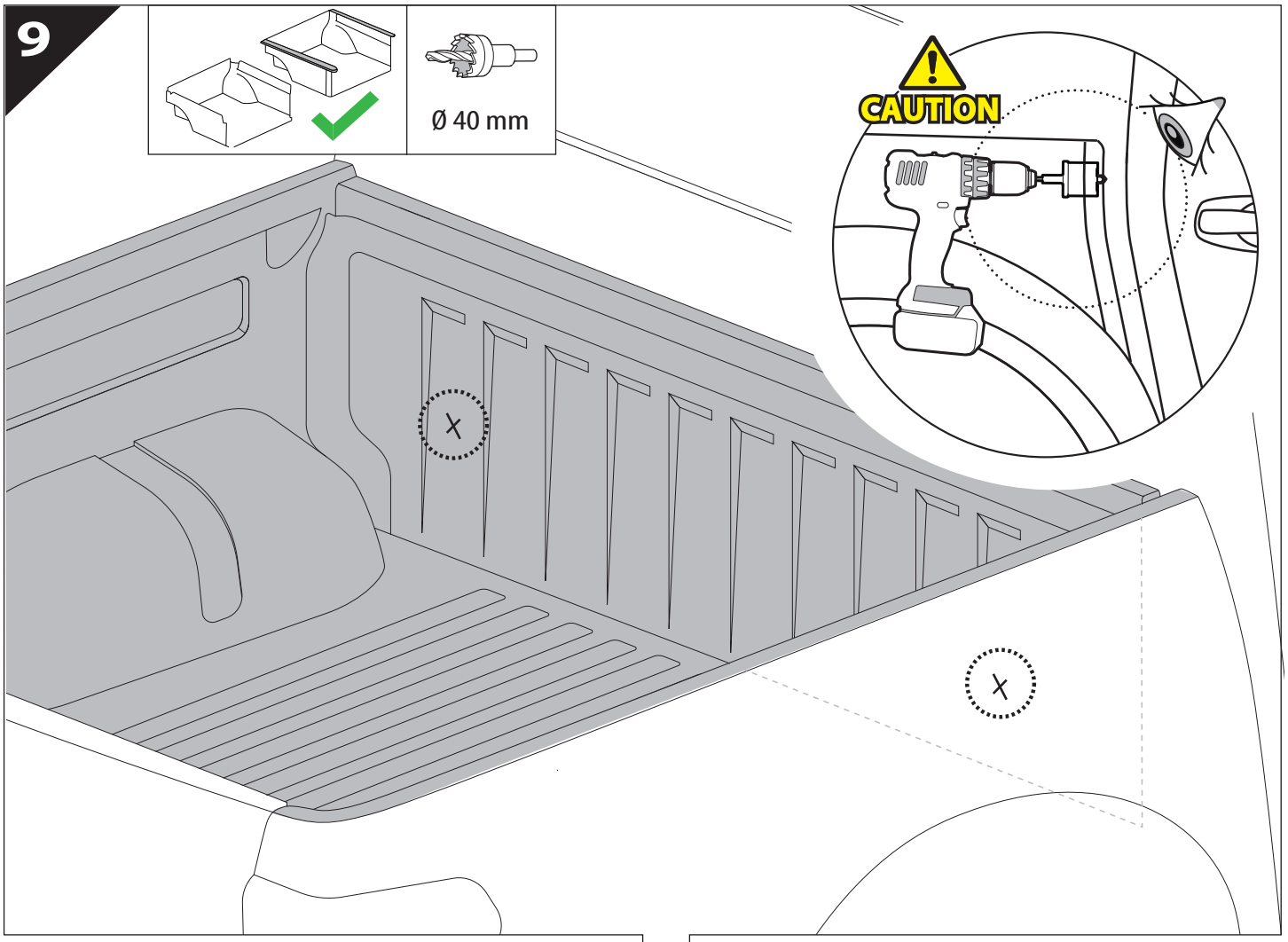
9
Ø 40 mm
CAUTION

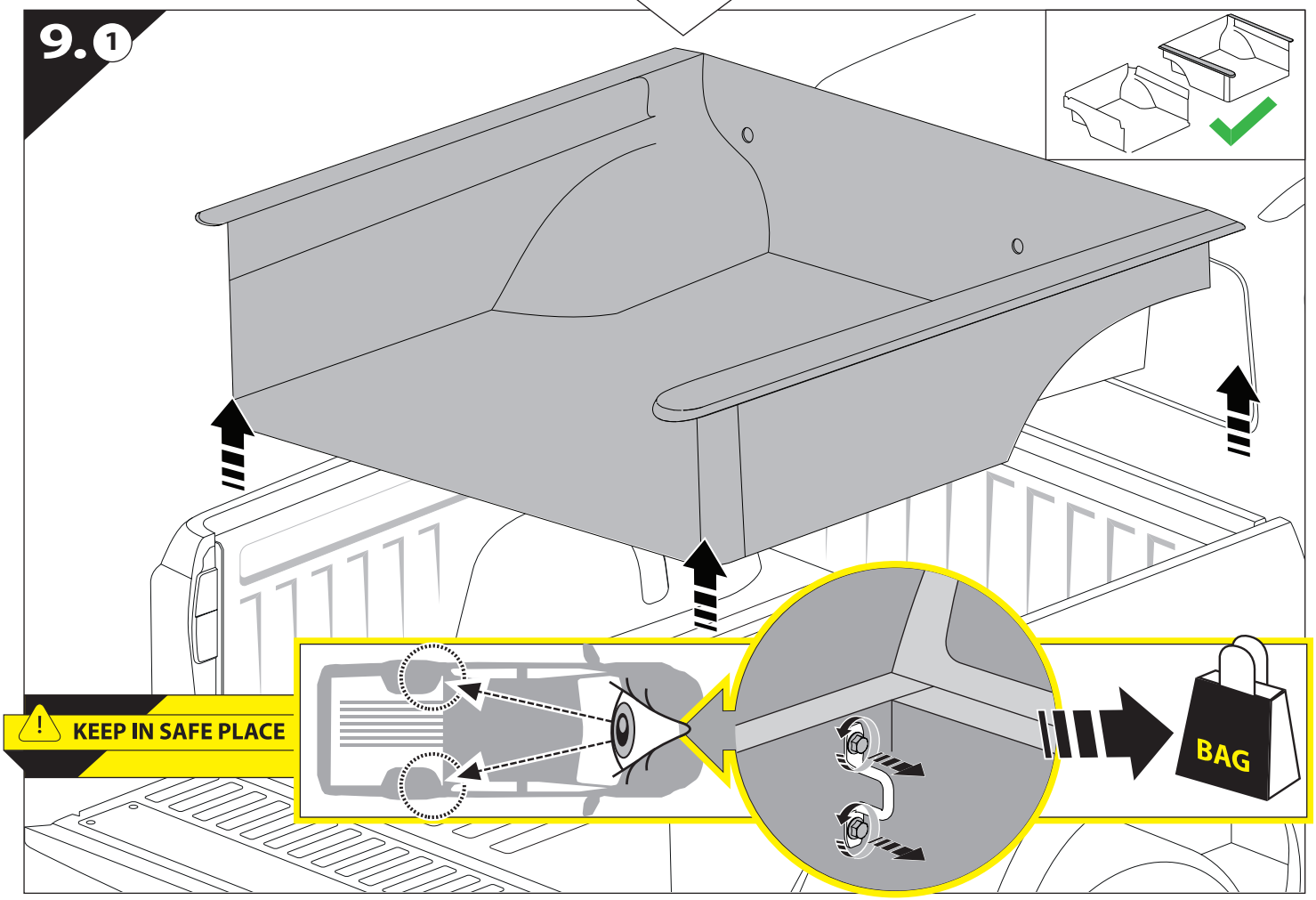
9.1
KEEP IN SAFE PLACE
BAG

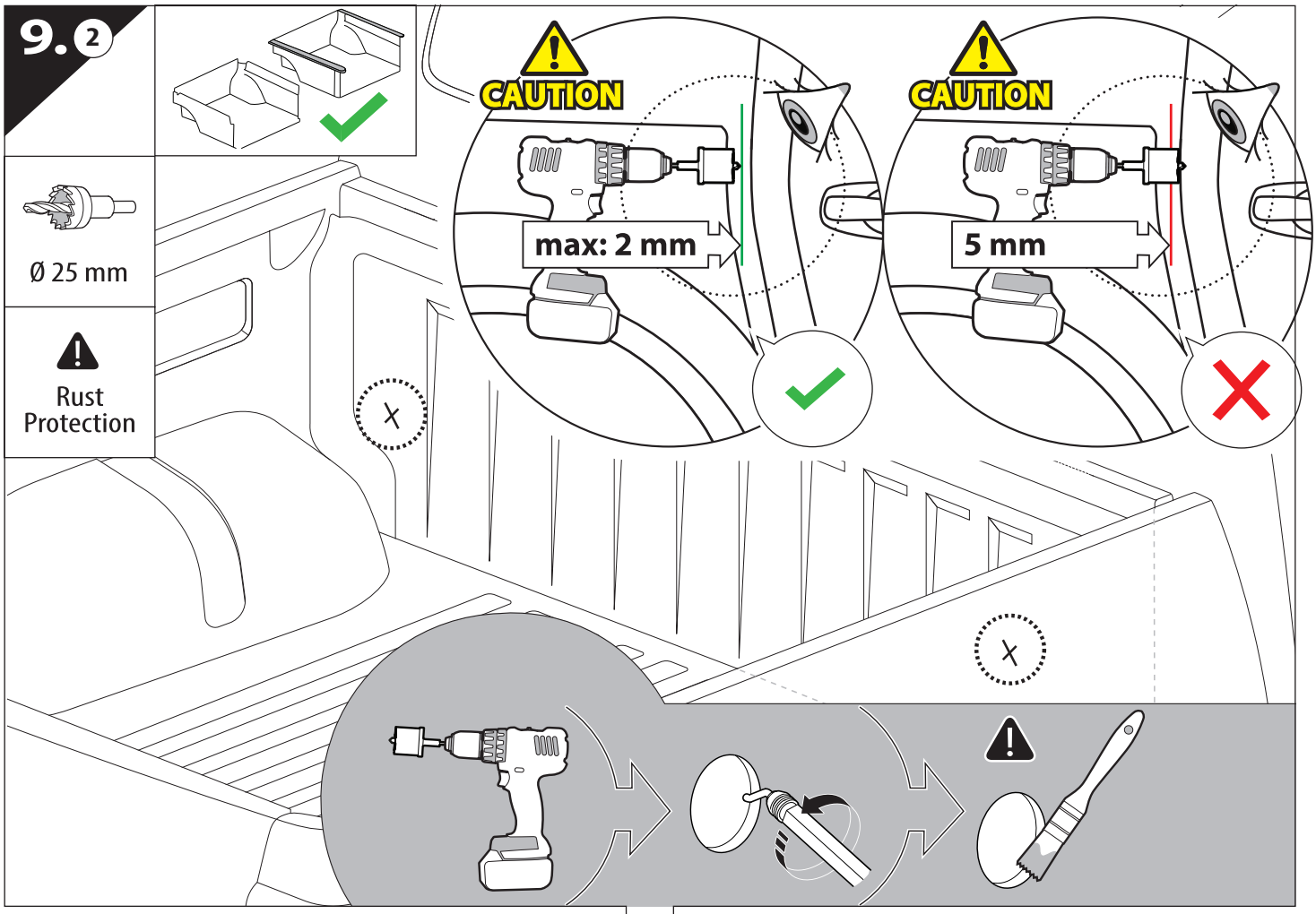
9. 2
Ø 25 mm
Rust Protection
CAUTION
max: 2 mm
CAUTION
5 mm

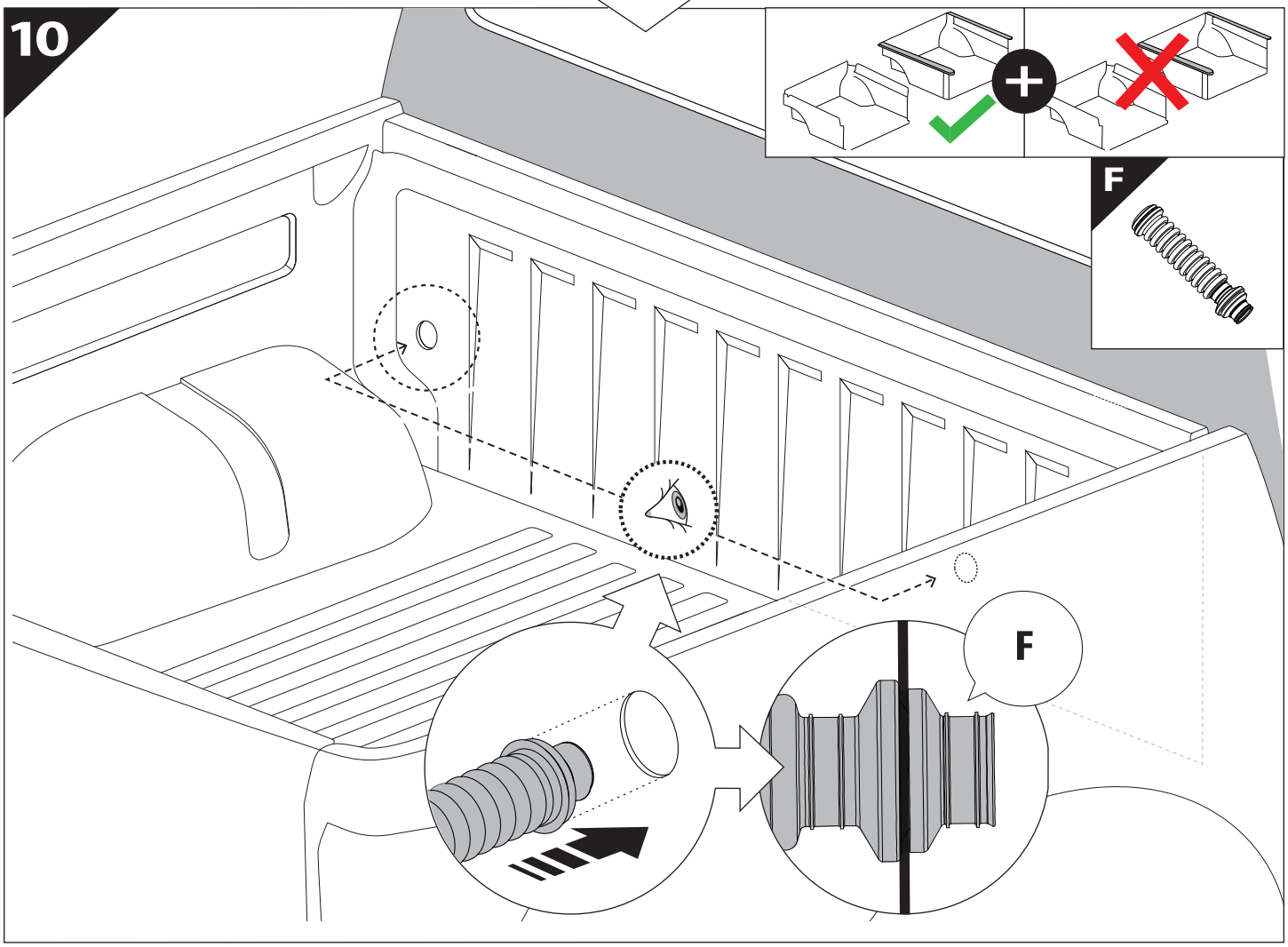
10
F
F

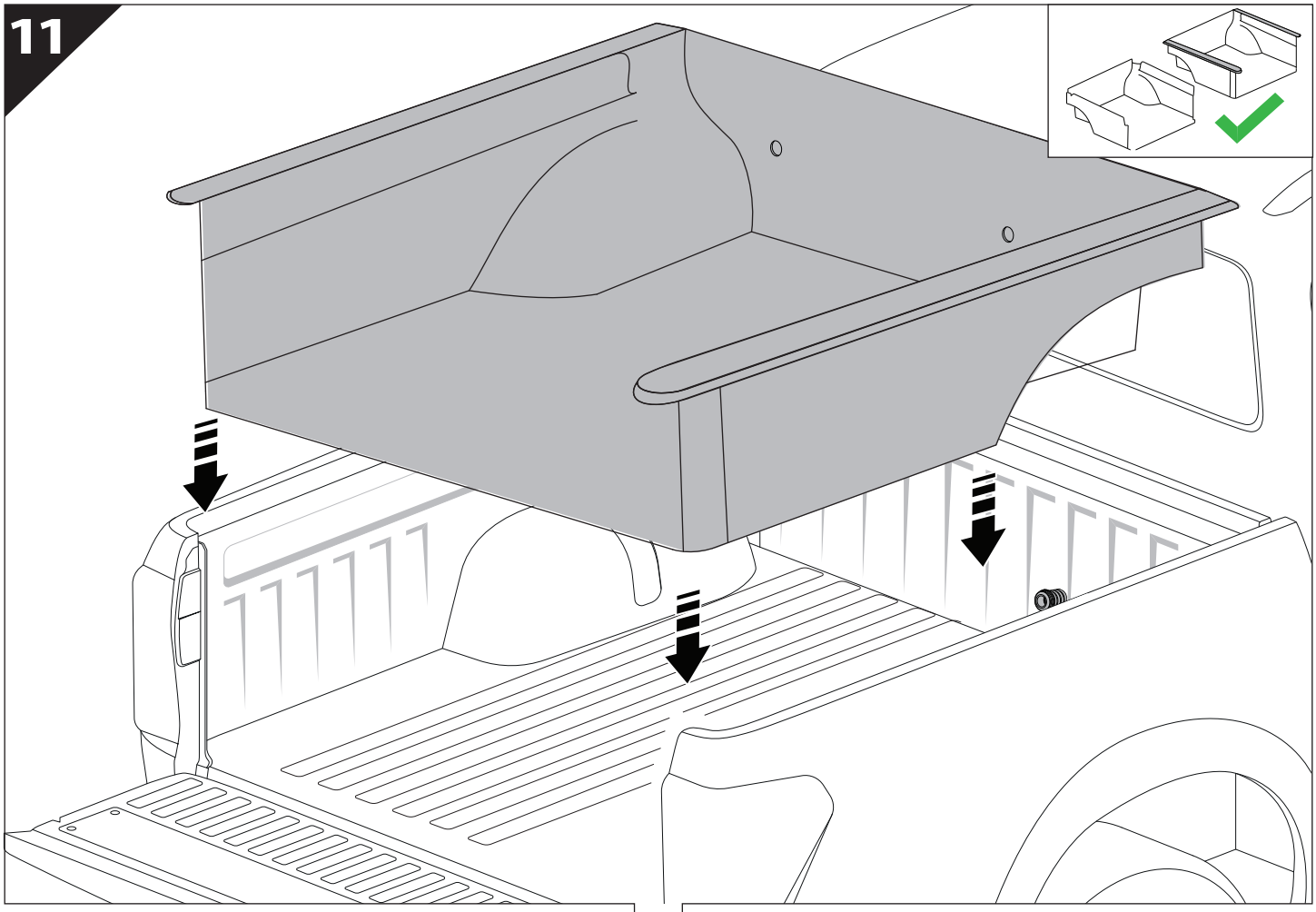
11

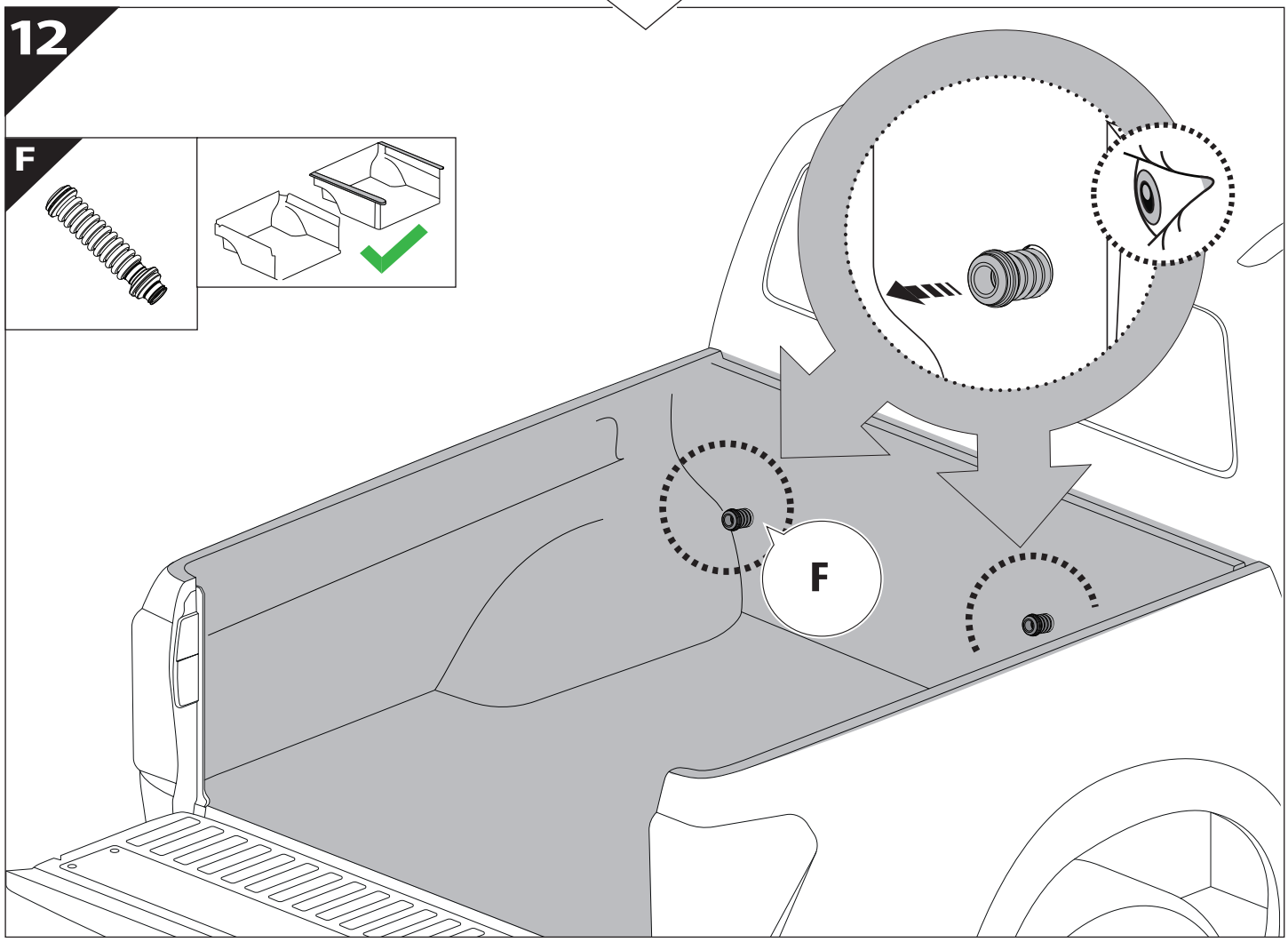
12
F
F

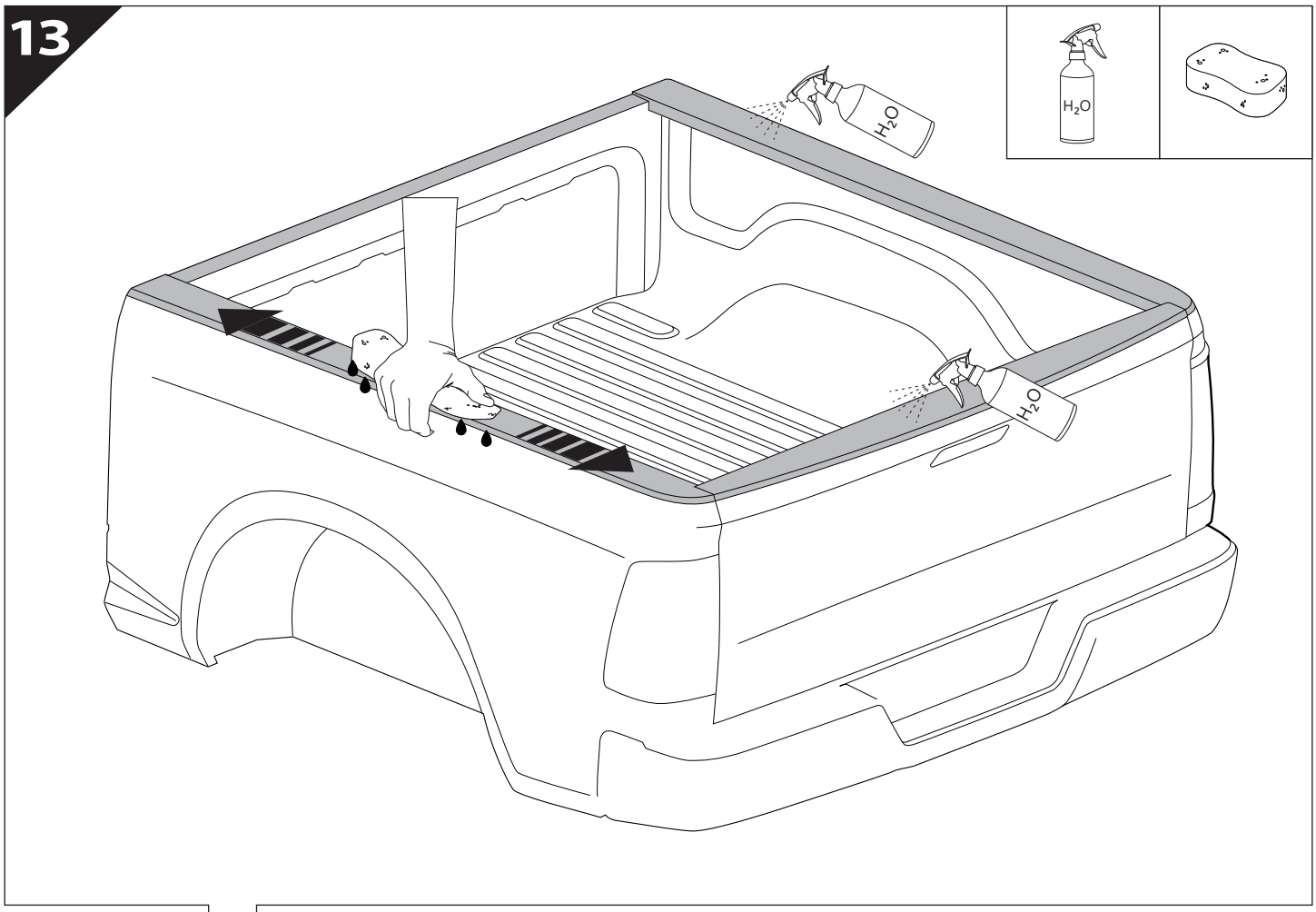
13
H2O
H2O
H2O

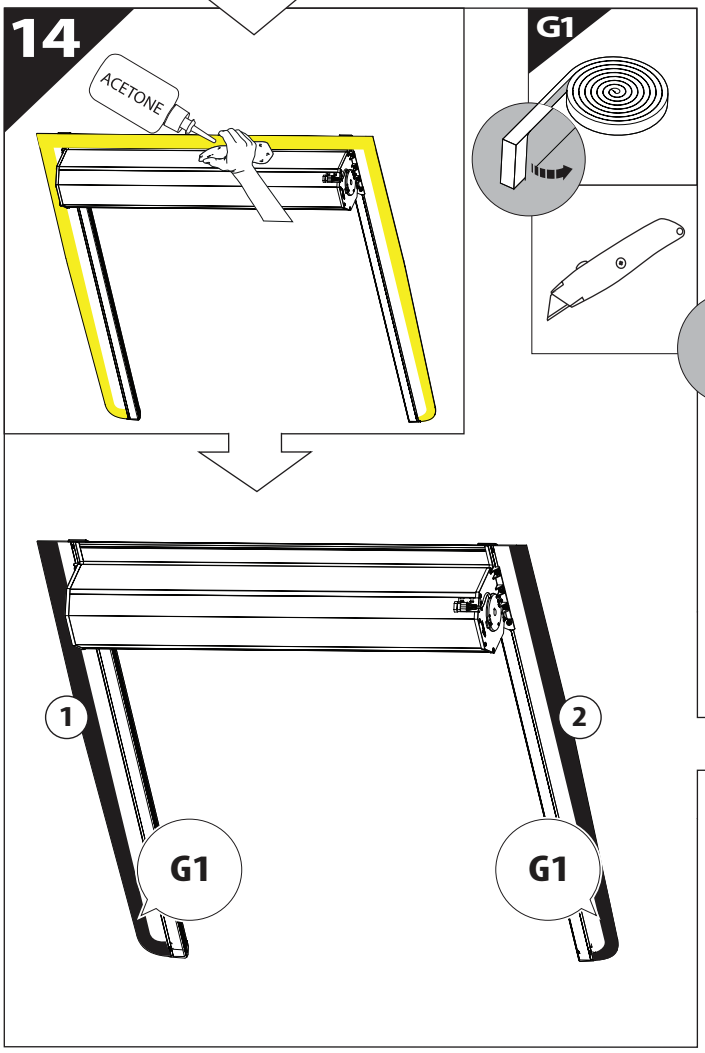
14
ACETONE
G1
1
2
G1
G1

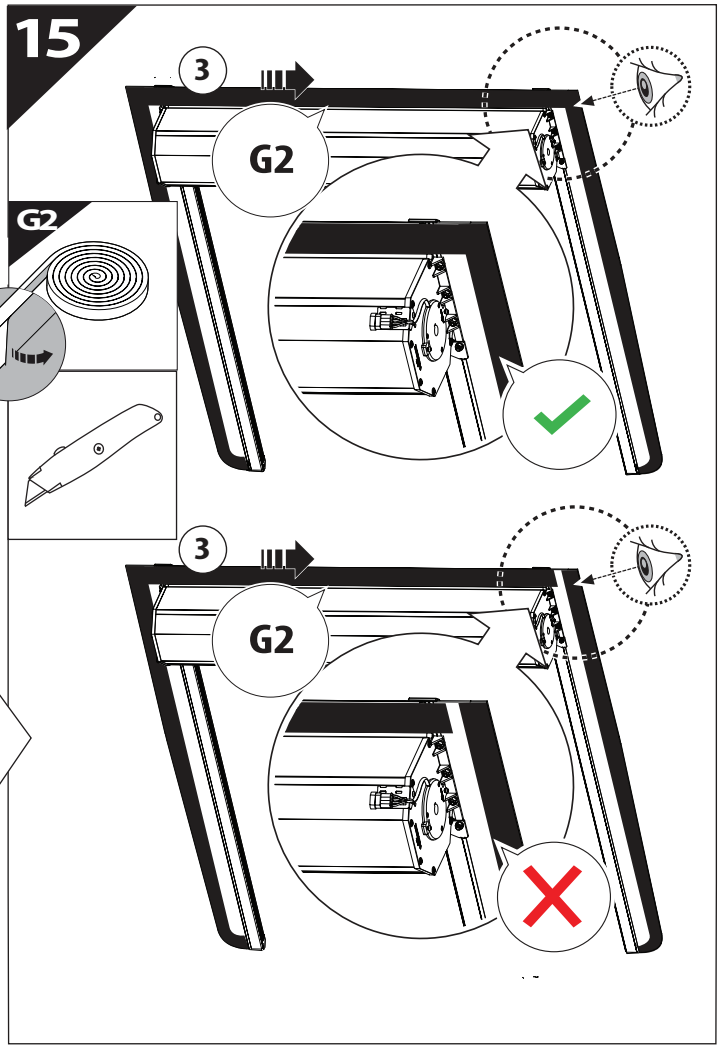
15
G2
3
G2
G2
3
G2

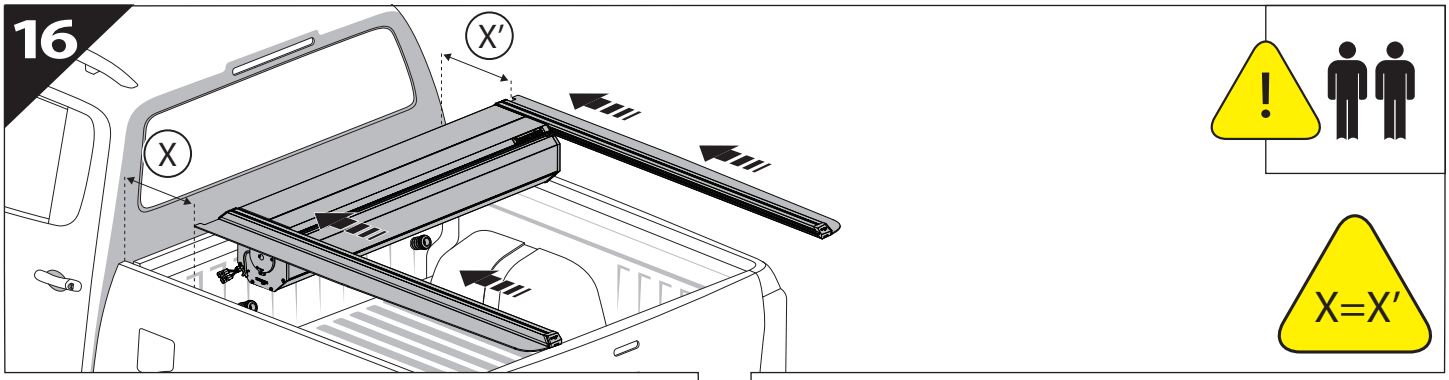
16
X
X'
X=X'

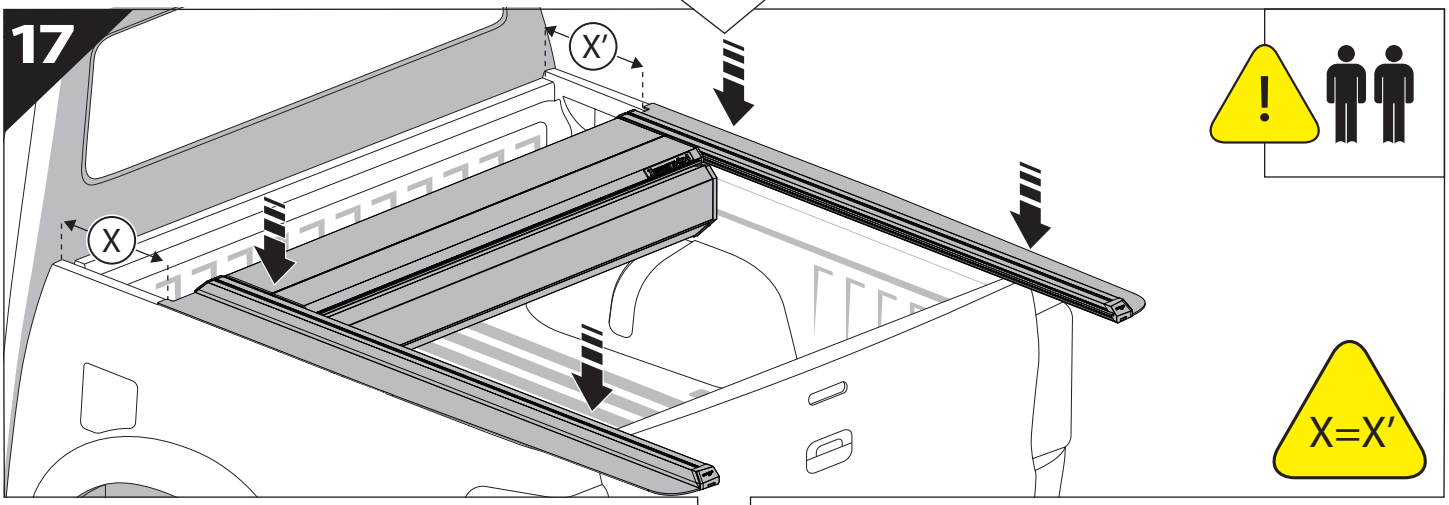
17
X
X'
X=X'

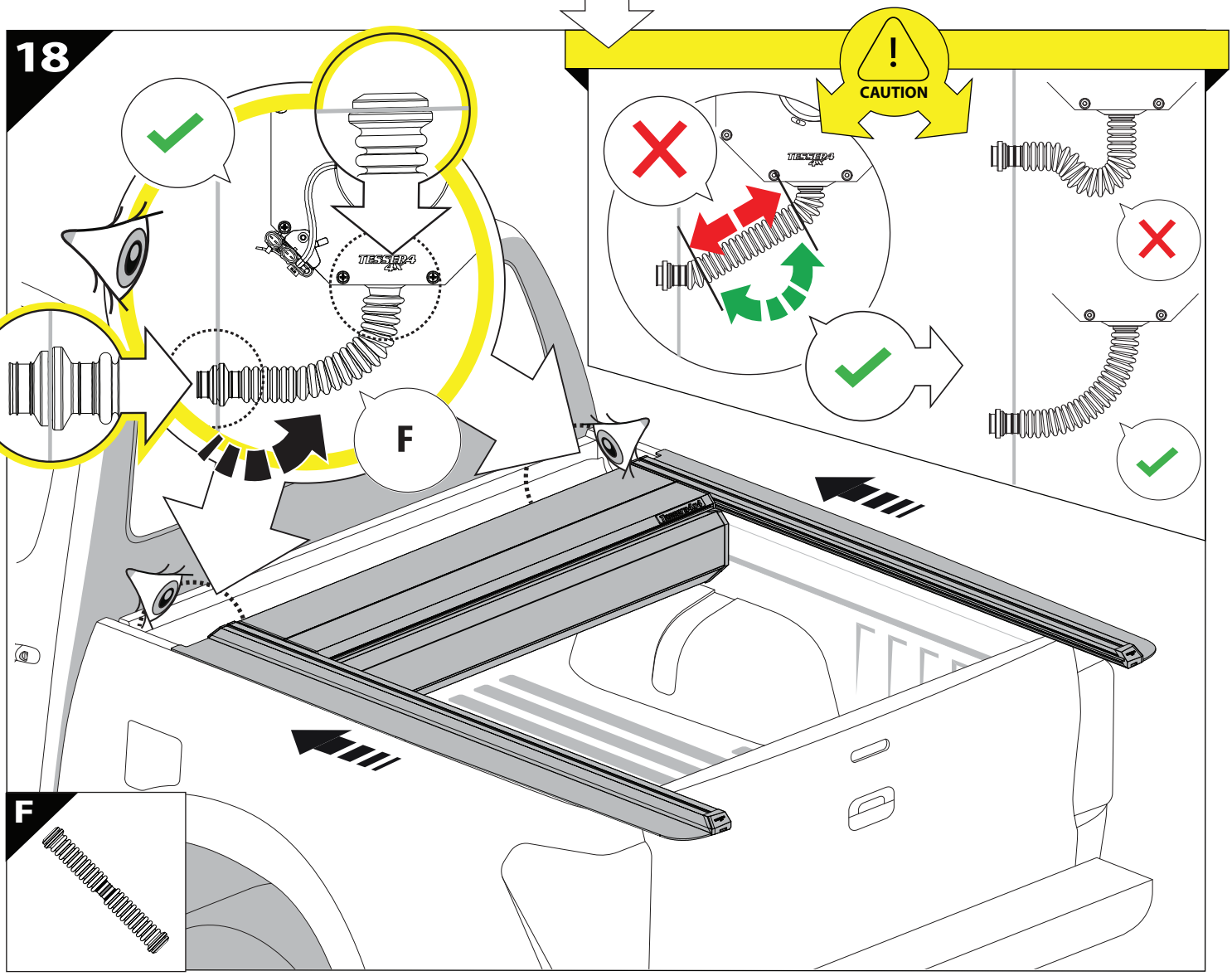
18
CAUTION
F
F

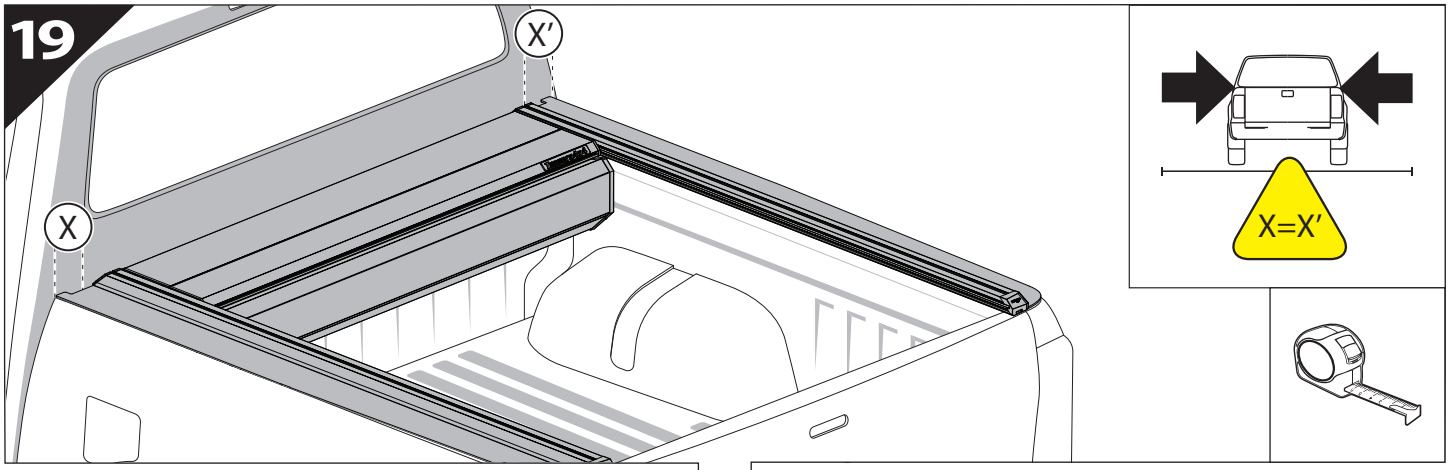
19
X'
X
X=X'

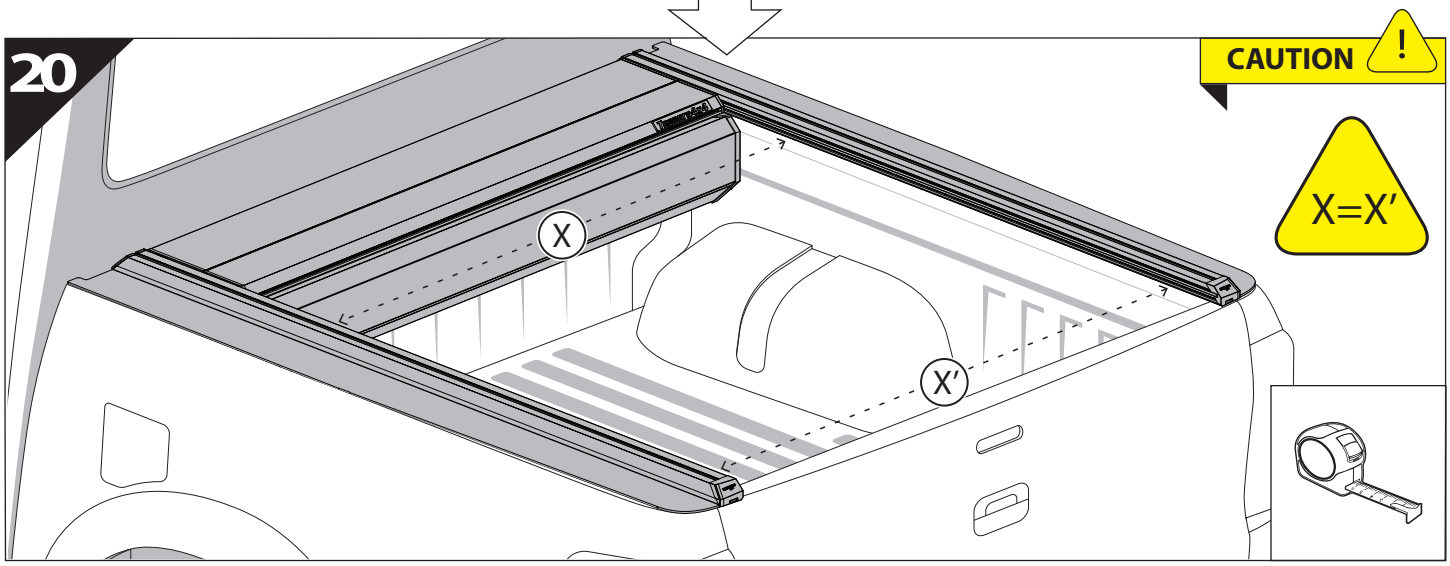
20
CAUTION
!
X=X'
X
X'

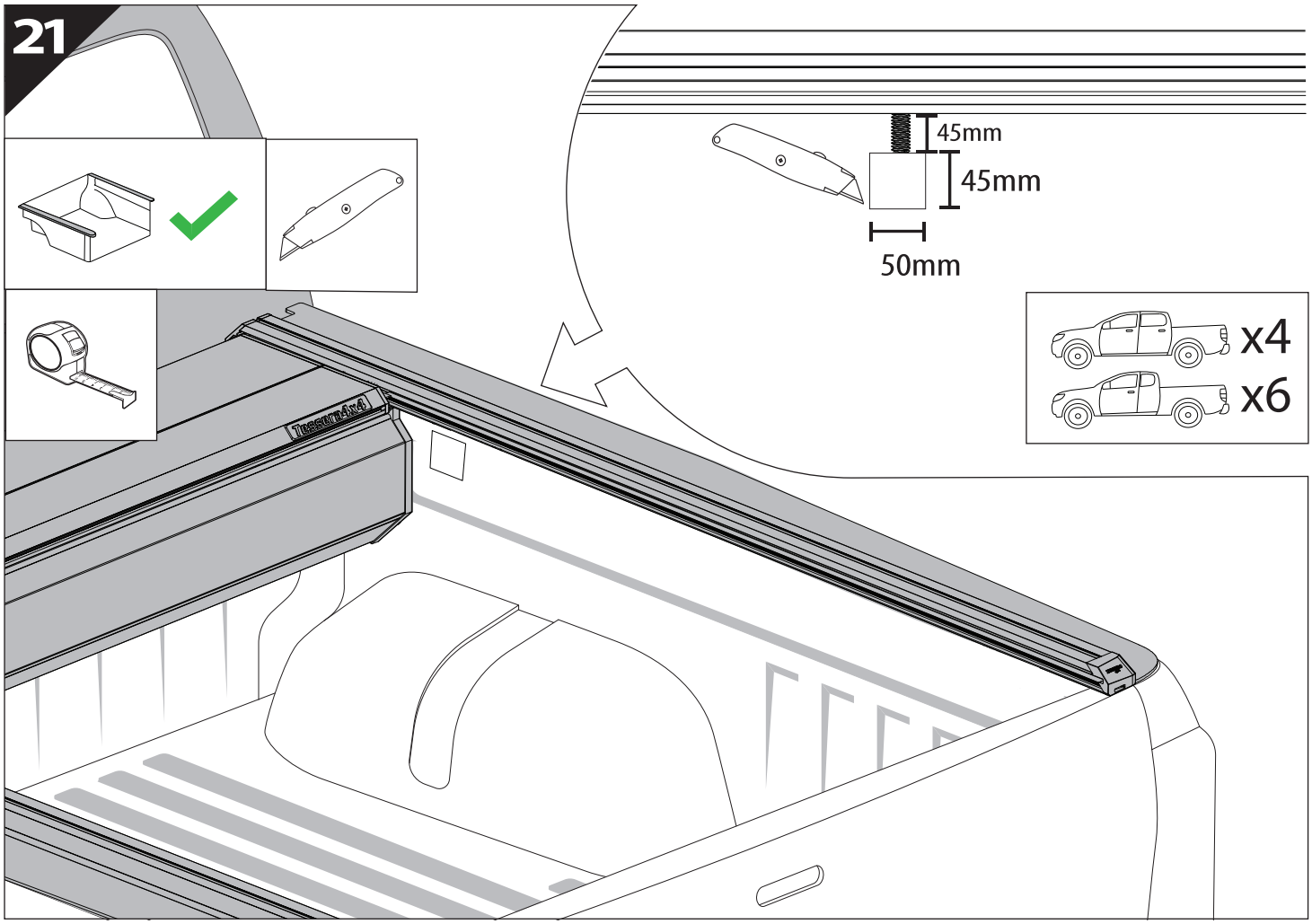
21
45mm
45mm
50mm
x4
x6

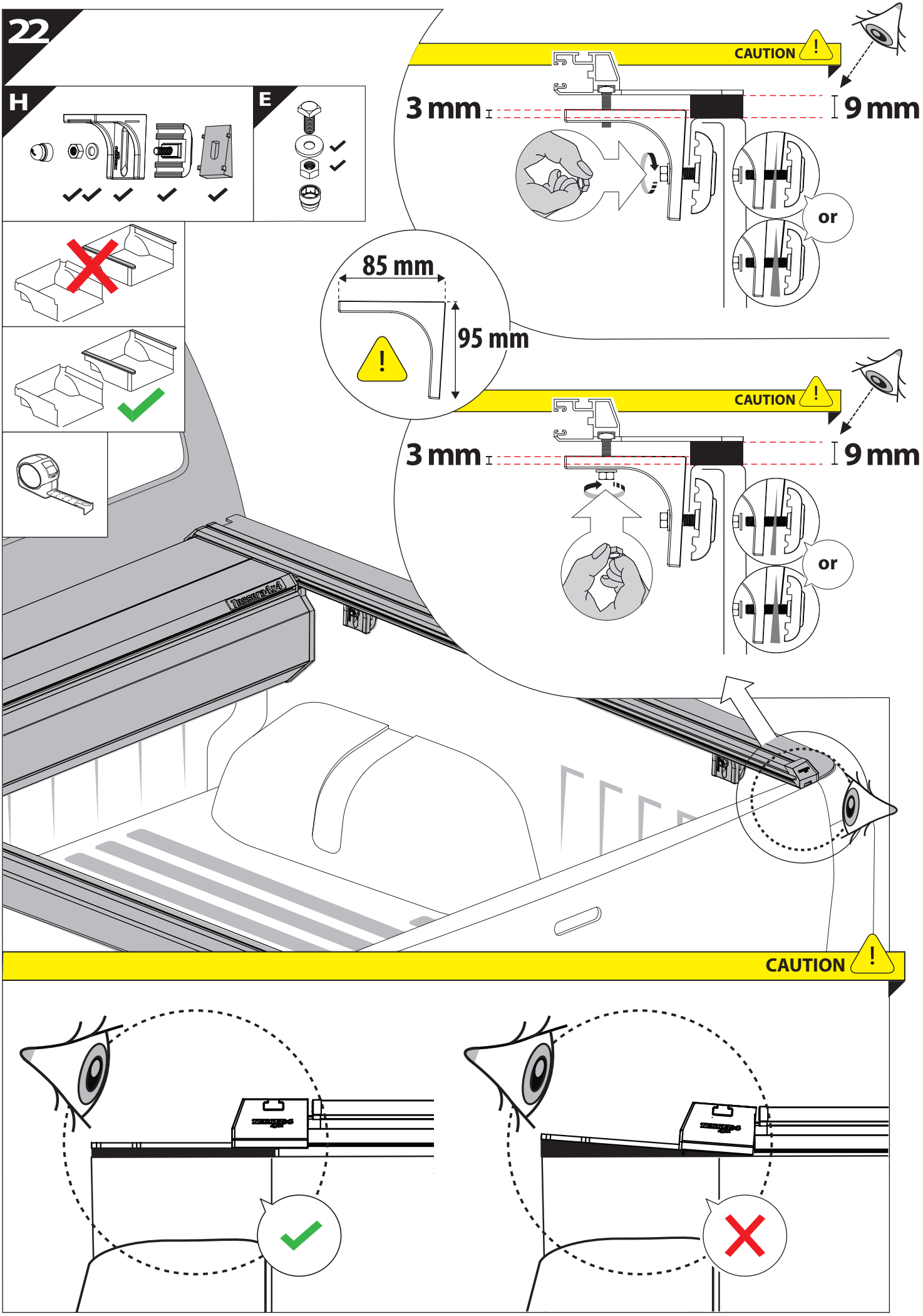
22
H
E
CAUTION
3 mm
9 mm
or
85 mm
95 mm
CAUTION
3 mm
9 mm
or
CAUTION

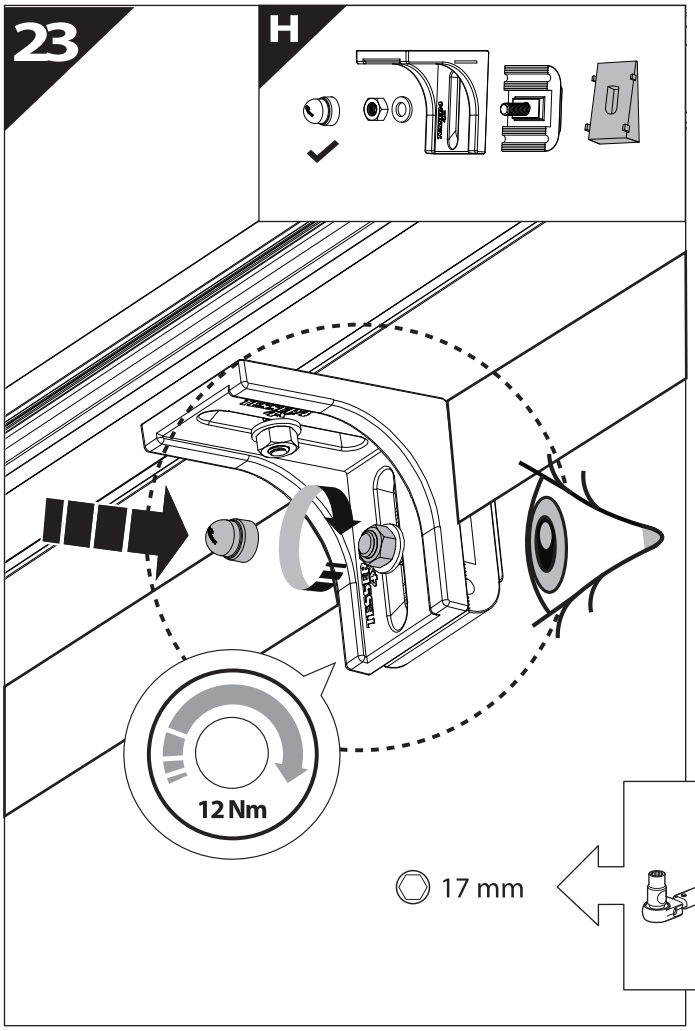
23
H
12 Nm
17 mm

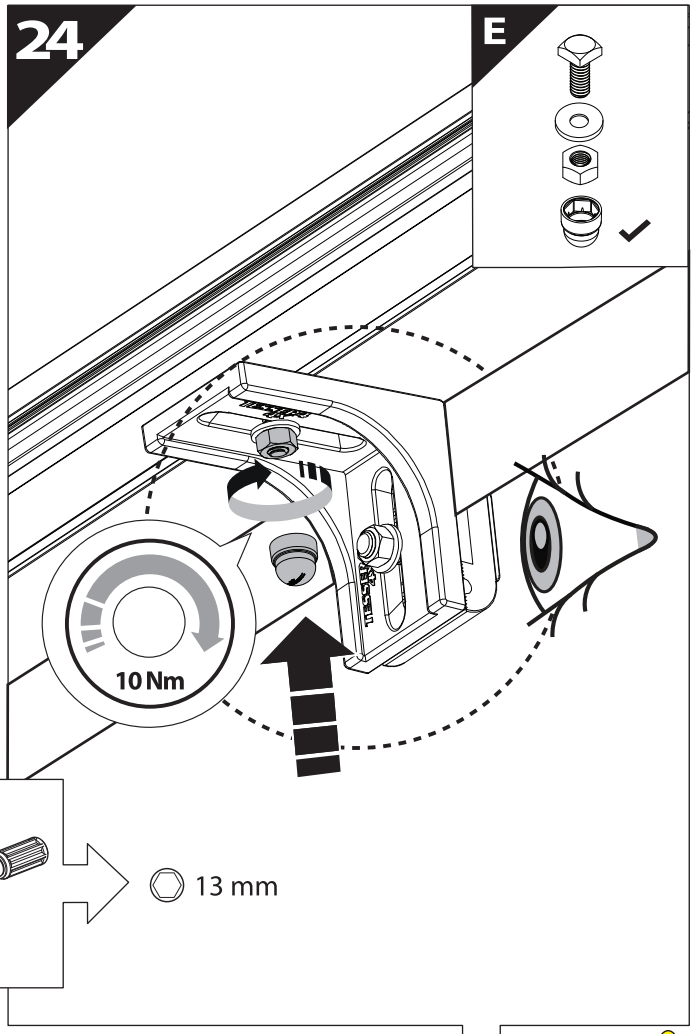
24
E
10 Nm
13 mm

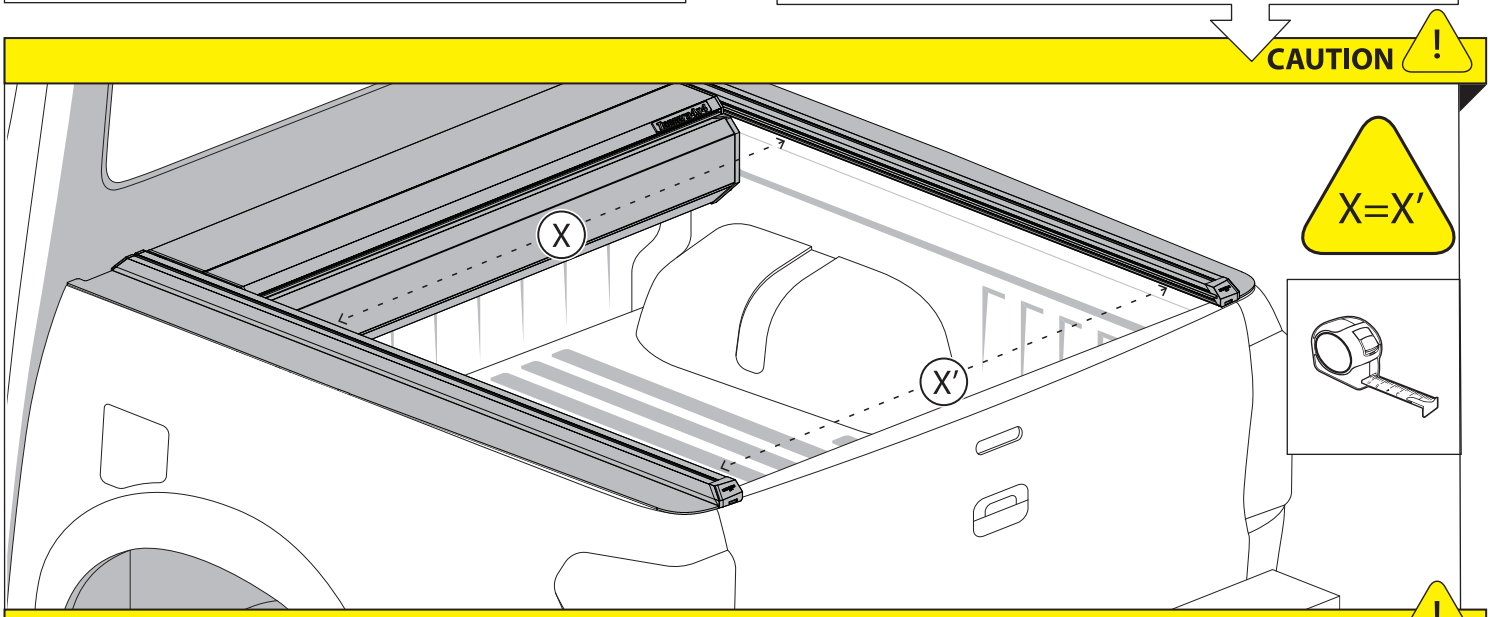
CAUTION
X=X'
X
X'

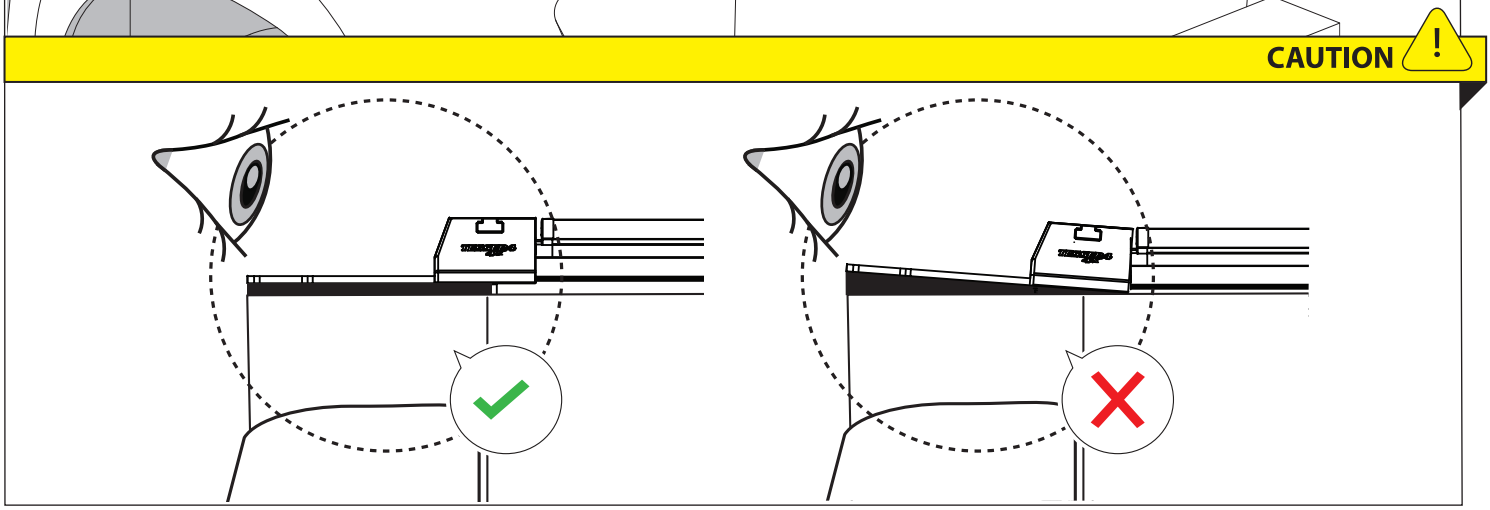
CAUTION

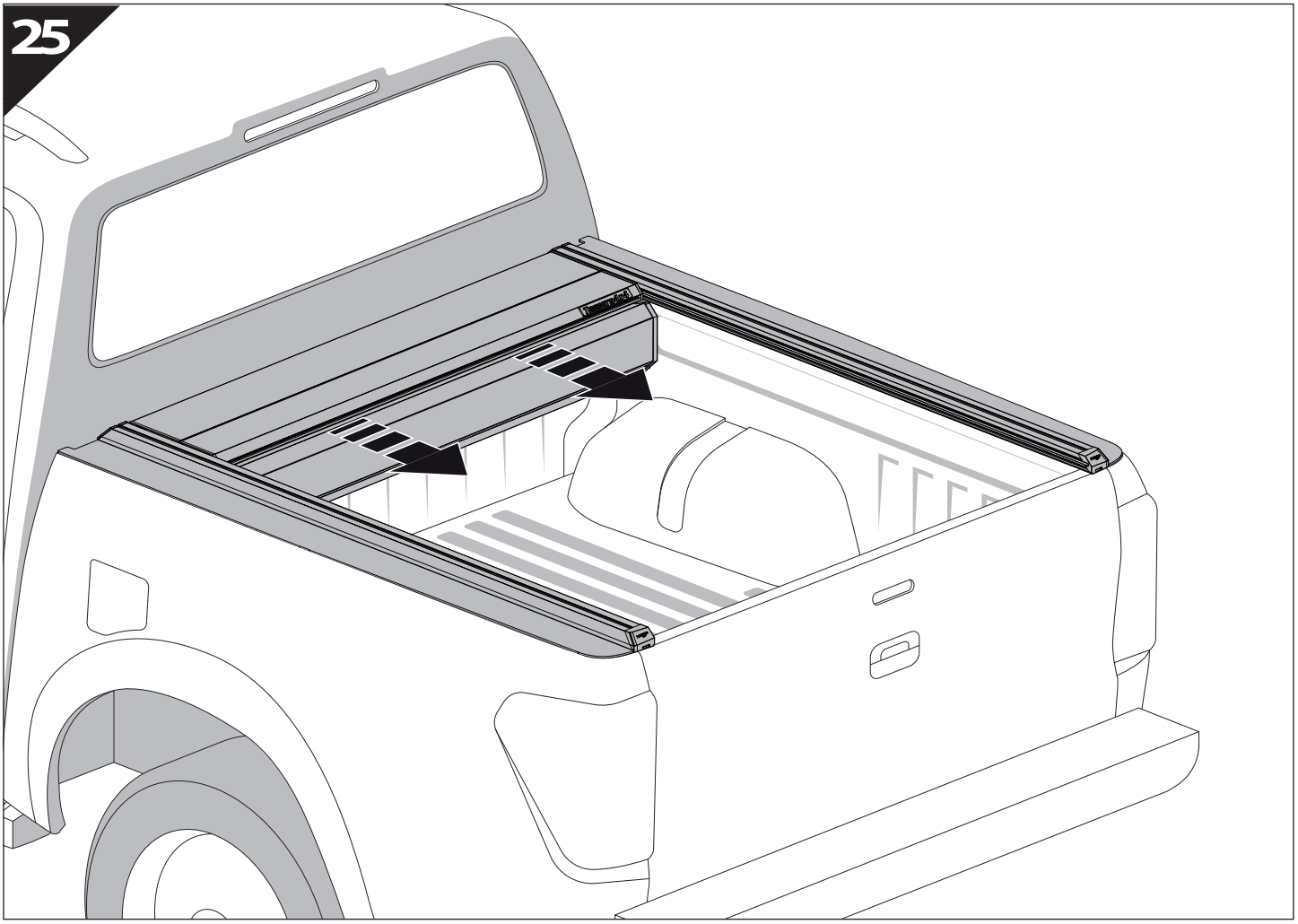
25

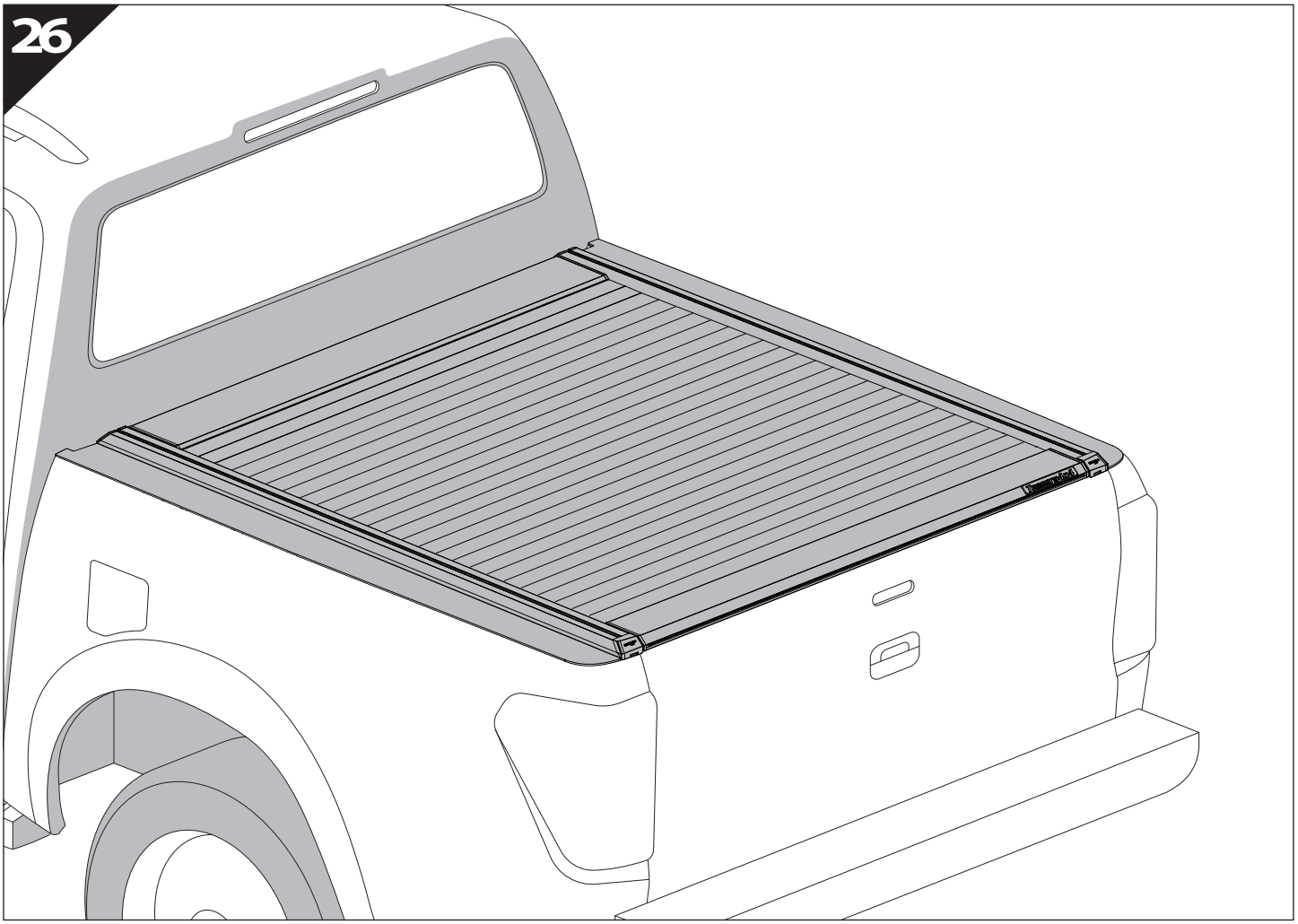
26

TESSERA 4x4
OFF ROAD ACCESSORIES
Think Quality!

GR:	Οδηγίες Εγκατάστασης	H:	Szerelési utasítás
GB:	Installation manual	P:	Instruções de instalação
SF:	Asennusohje	RUS:	Инструкция по установке
F:	Notice de montage	N:	Monteringsveiledning
PL:	Instrukcja montażu	D:	Einbauanleitung
NL:	Installatie-instructies	CZ:	Návod k instalaci
TR:	Montaj Talimatı	I:	Istruzioni de montaggio
S:	Monteringsanvisning	DK:	Monteringsvejledning
E:	Instrucciones de montaje	RO:	Instructiuni de instalare

Customer Service: +30 (210) 5541161, +30 (210) 5541154 (08:00 - 16:00 EET)

Support department: info@gianso.gr

Website: www.tessera4x4.com

Address: 19.5 km of National road Athens-Korinthos (Elefsina) Greece, P.C: 19200